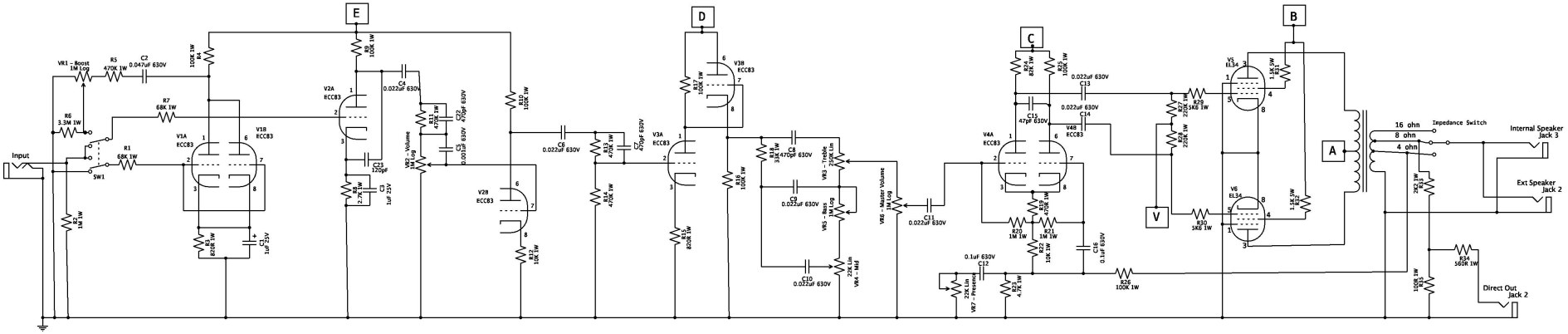

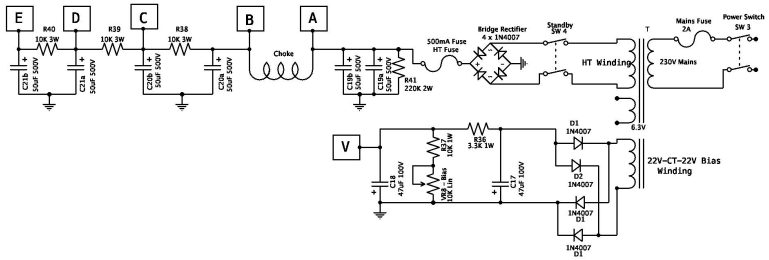

Brookfield Tube Audio		
JCM 800 Hot Rod		
Reuben Hopkins	Rev 1.0 2018-06-26	Page #