John A. Jasilli

Silvertone 1482a - JAJ

JAJ	Mod-Ver 4 05-14-09	Page 1 of 1

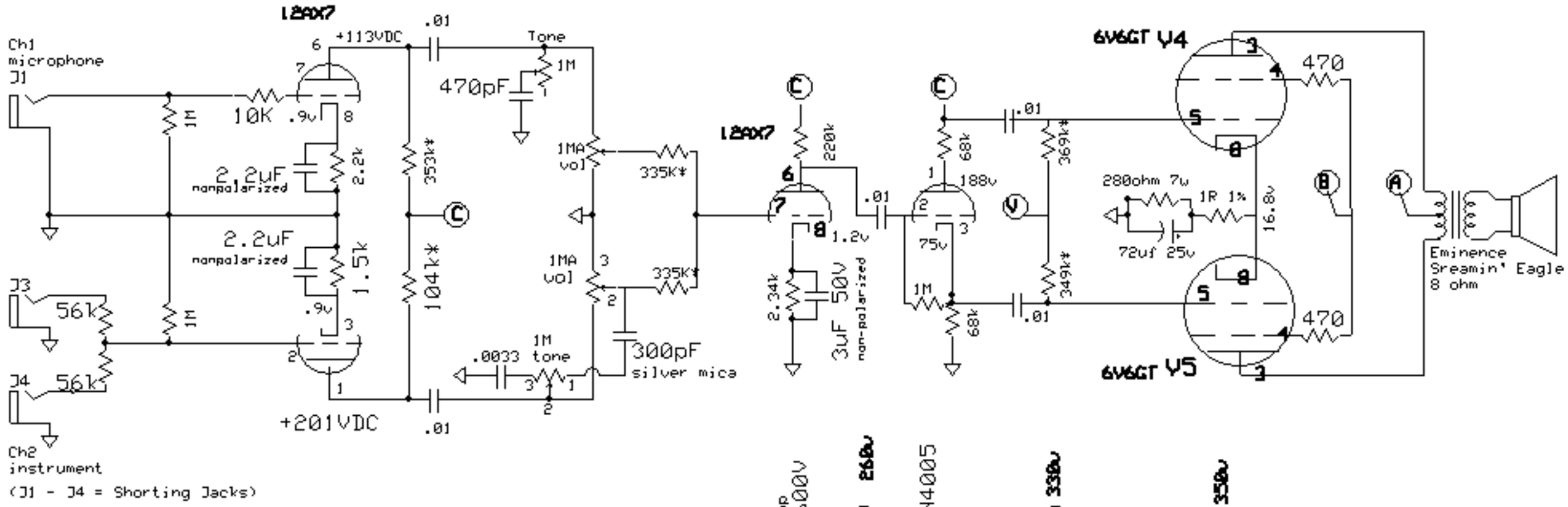

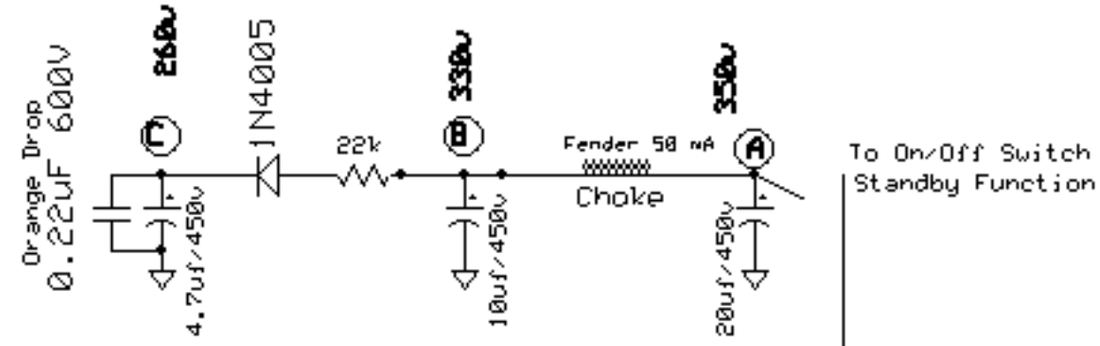

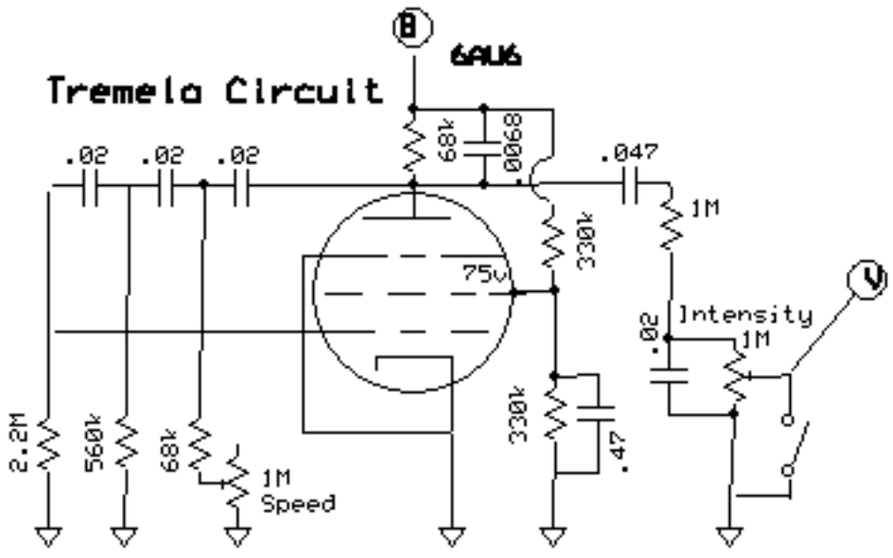

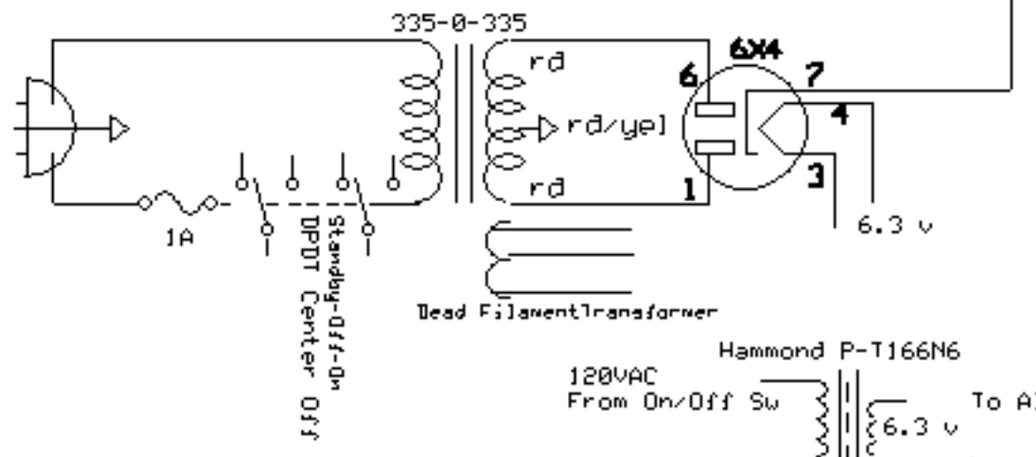

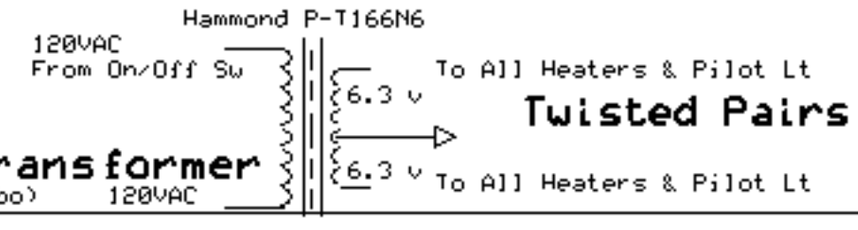

* as measured

Supplemental Filament Transformer

(mounted to bottom wall of combo)