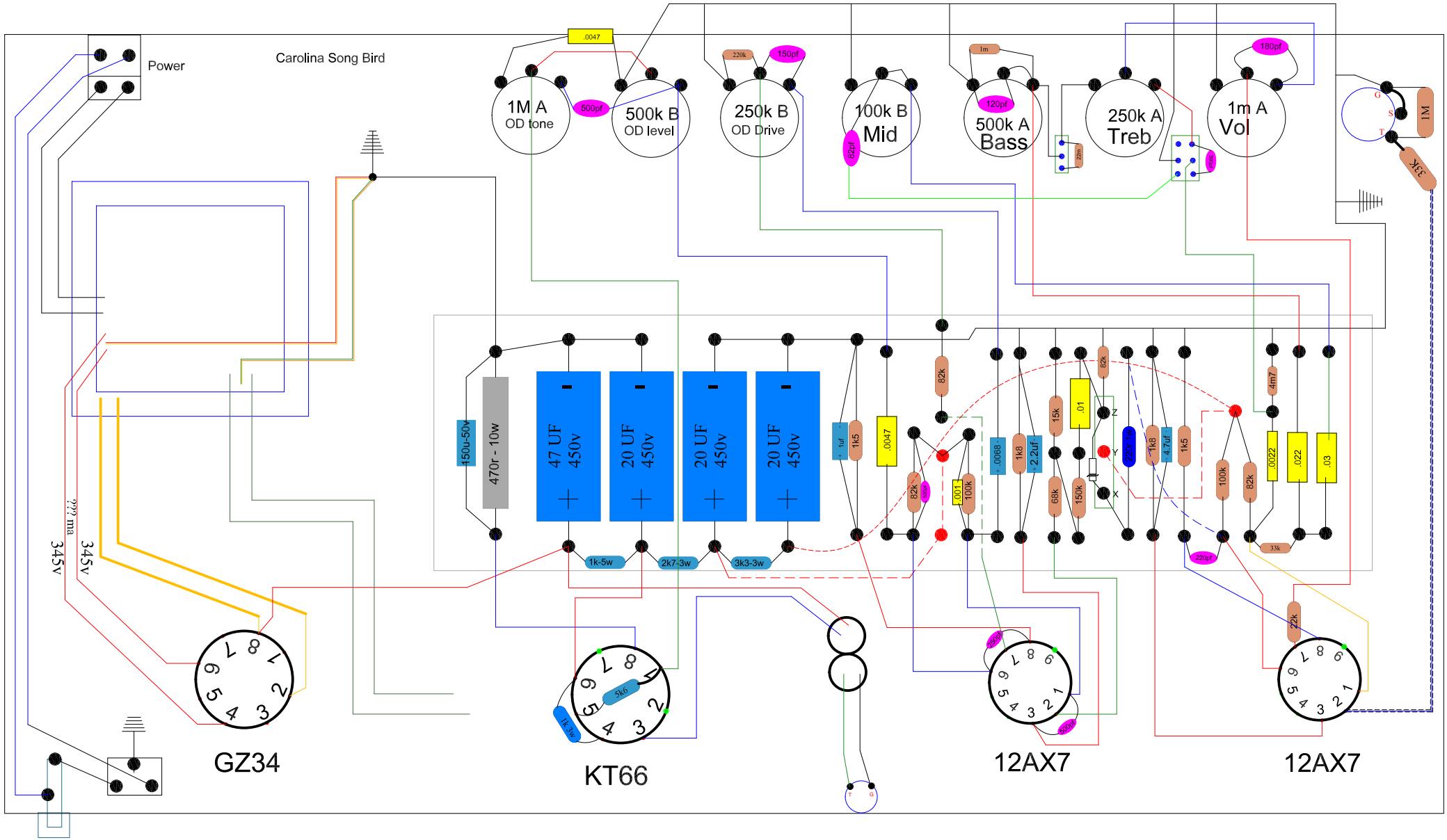
Carolina Song Bird
Power
1M A
OD tone
500pf
500k B
OD level
.0047
250k B
OD Drive
220k
150pf
100k B
Mid
82pf
500k A
Bass
120pf
1m
22m
250k A
Treb
1m A
Vol
180pf
1M
33K
470r - 10w
150u-50v
47 UF
450v
20 UF
450v
20 UF
450v
20 UF
450v
1k-5w
2k7-3w
3k3-3w
1uf
1k5
.0047
82k
100k
.001
.0068
1k8
2.2uf
68k
15k
150k
.01
82k
22m-1k5
1k8
4.7uf
1k5
100k
82k
4m7
.0022
.022
.03
33k
220pf
22k
??? ma
345v
345v
GZ34
KT66
5k6
12AX7
12AX7