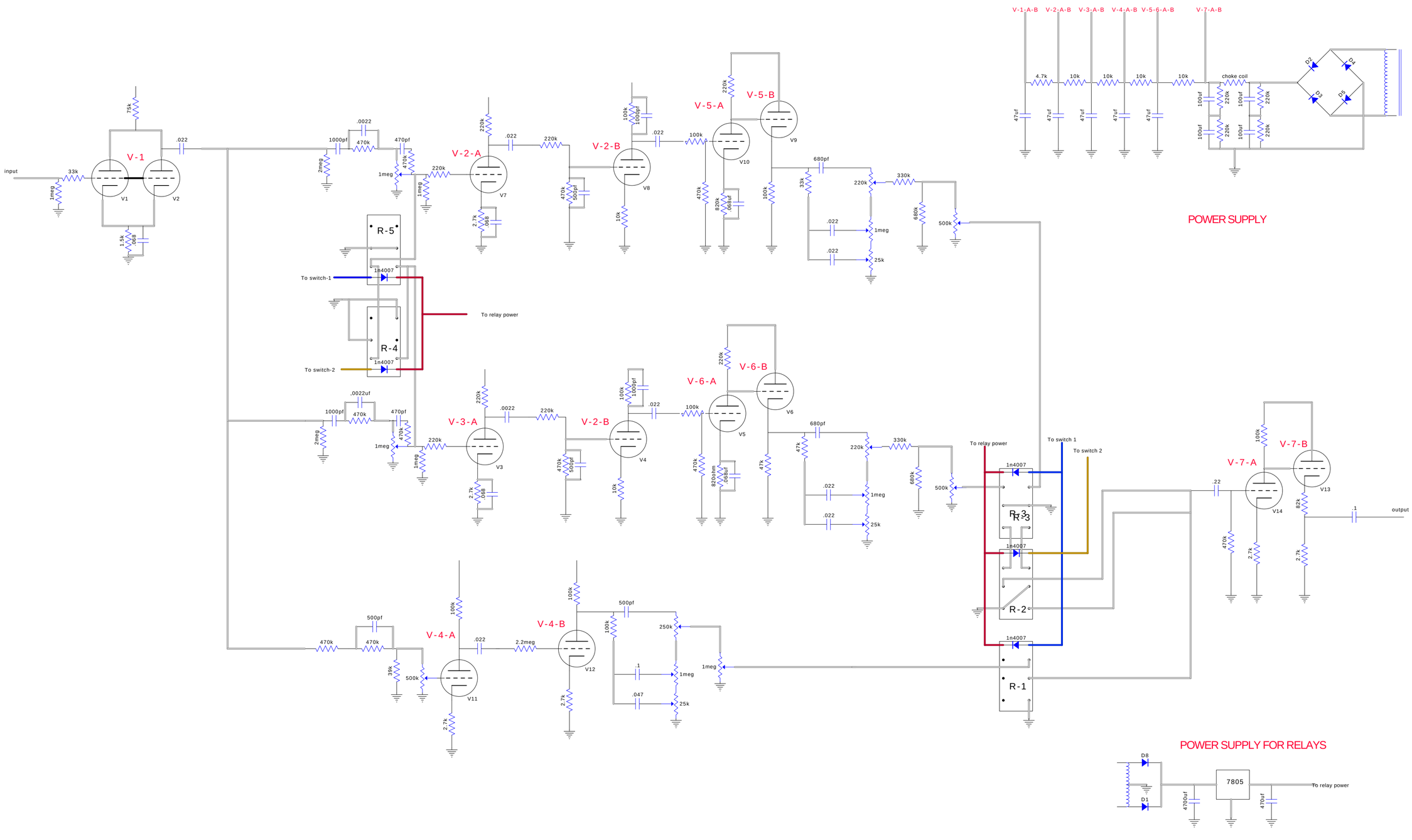

POWER SUPPLY FOR RELAYS