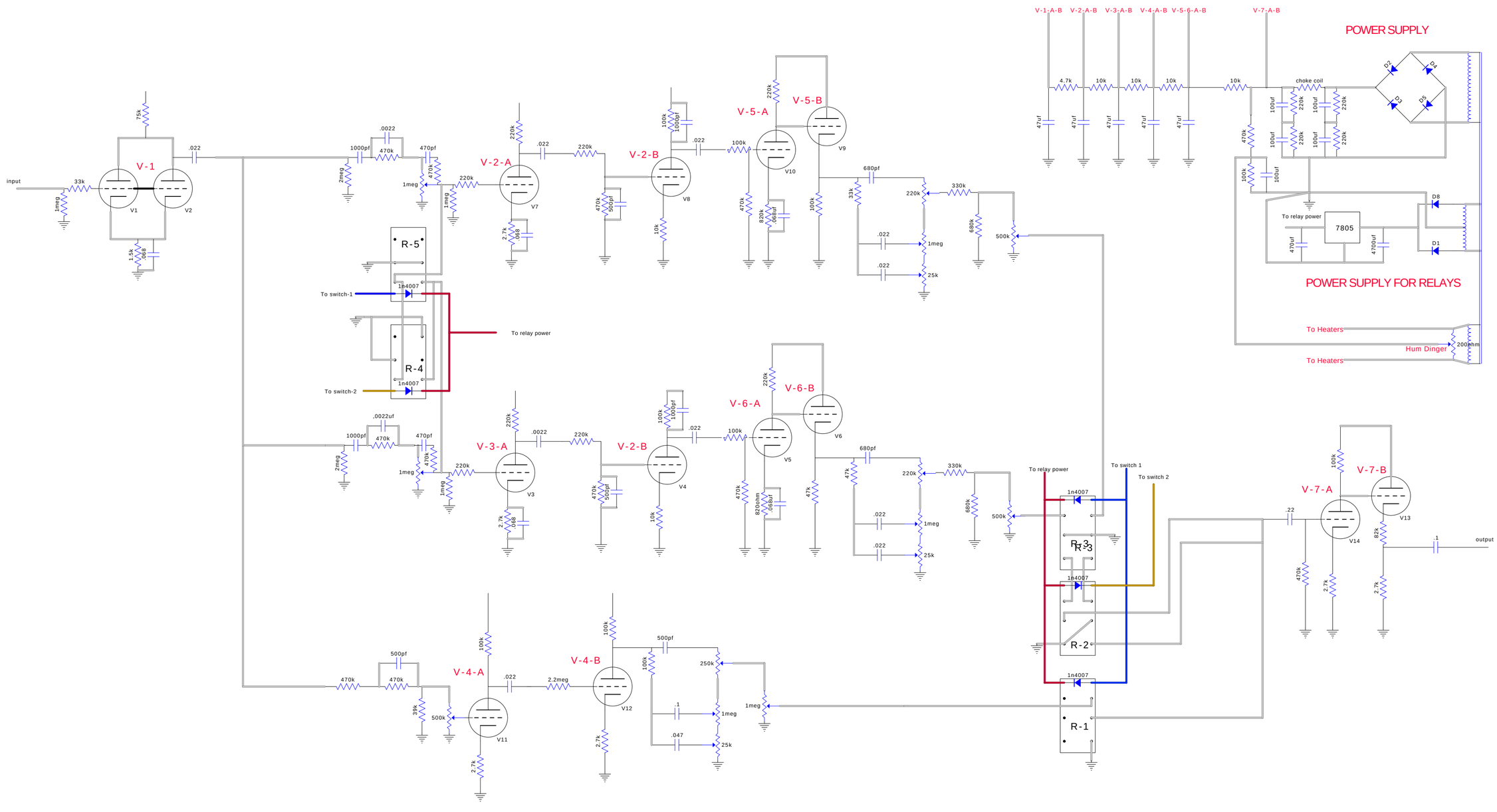
V-1-A-B
V-2-A-B
V-3-A-B
V-4-A-B
V-5-6-A-B
V-7-A-B
POWER SUPPLY
POWER SUPPLY FOR RELAYS
input
output
V-1
V-2-A
V-2-B
V-3-A
V-4-A
V-4-B
V-5-A
V-5-B
V-6-A
V-6-B
V-7-A
V-7-B
R-1
R-2
R-3
R-4
R-5
To switch-1
To switch-2
To relay power
To switch 1
To switch 2
To Heaters
Hum Dinger
200ohm
choke coil
7805
1n4007