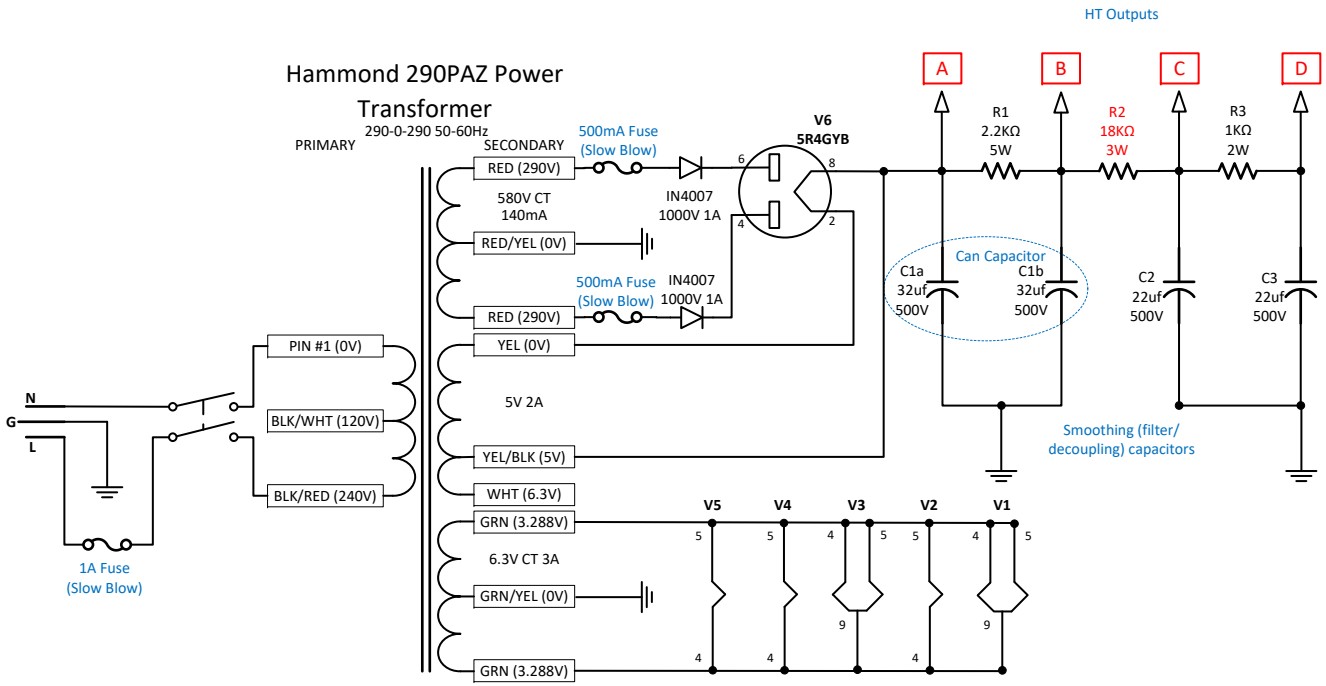

Modification of original design by Steve Luckey. Component Value changes

All resistors 1W unless specified

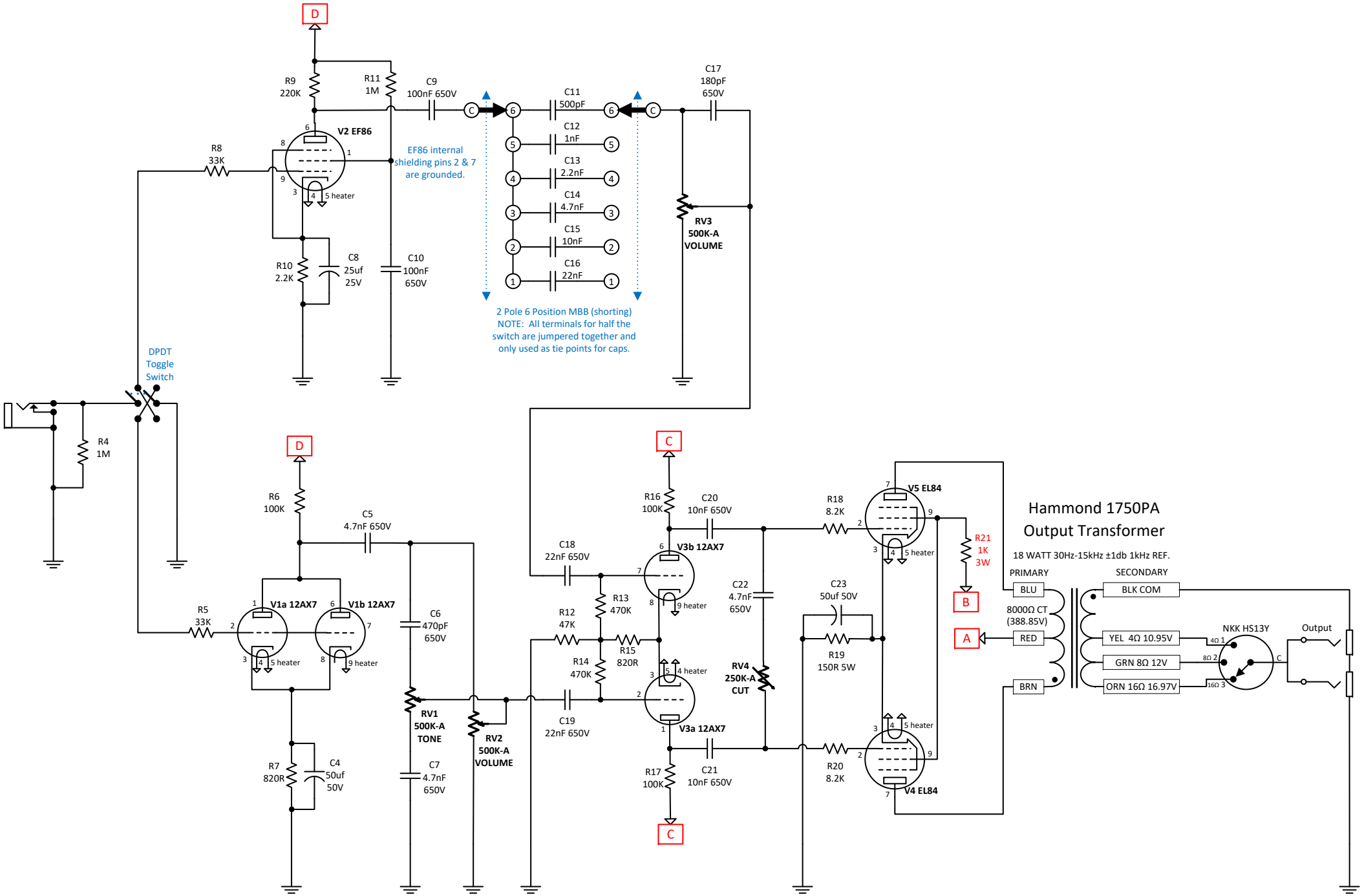

Modification of original design by Steve Luckey. Component Value changes in red.