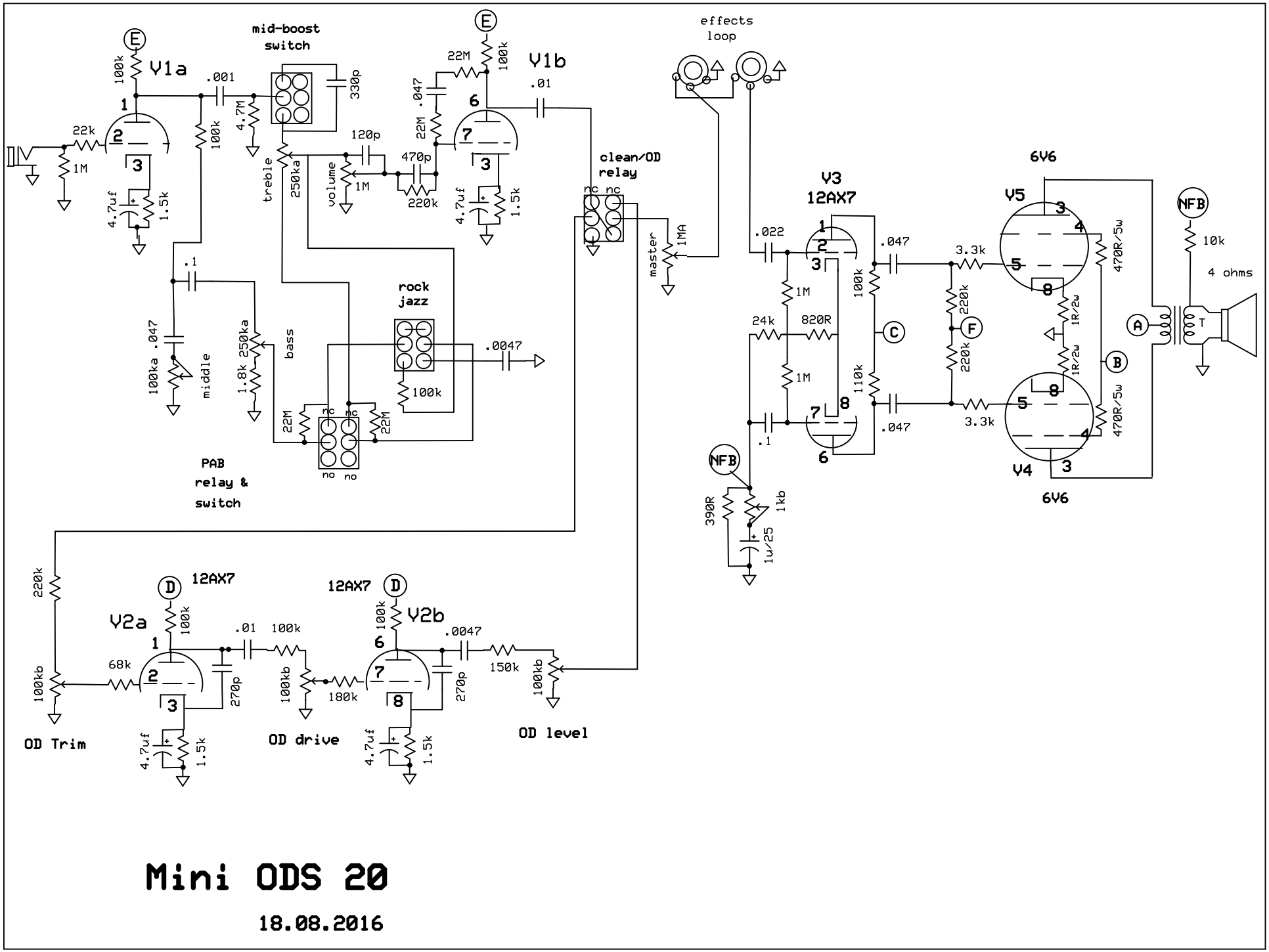
V1a
V1b
V2a
V2b
V3
12AX7
V4
V5
6V6
mid-boost switch
effects loop
clean/OD relay
rock jazz
PAB relay & switch
treble
volume
bass
middle
master
OD Trim
OD drive
OD level
NFB
4 ohms
Mini ODS 20
18.08.2016