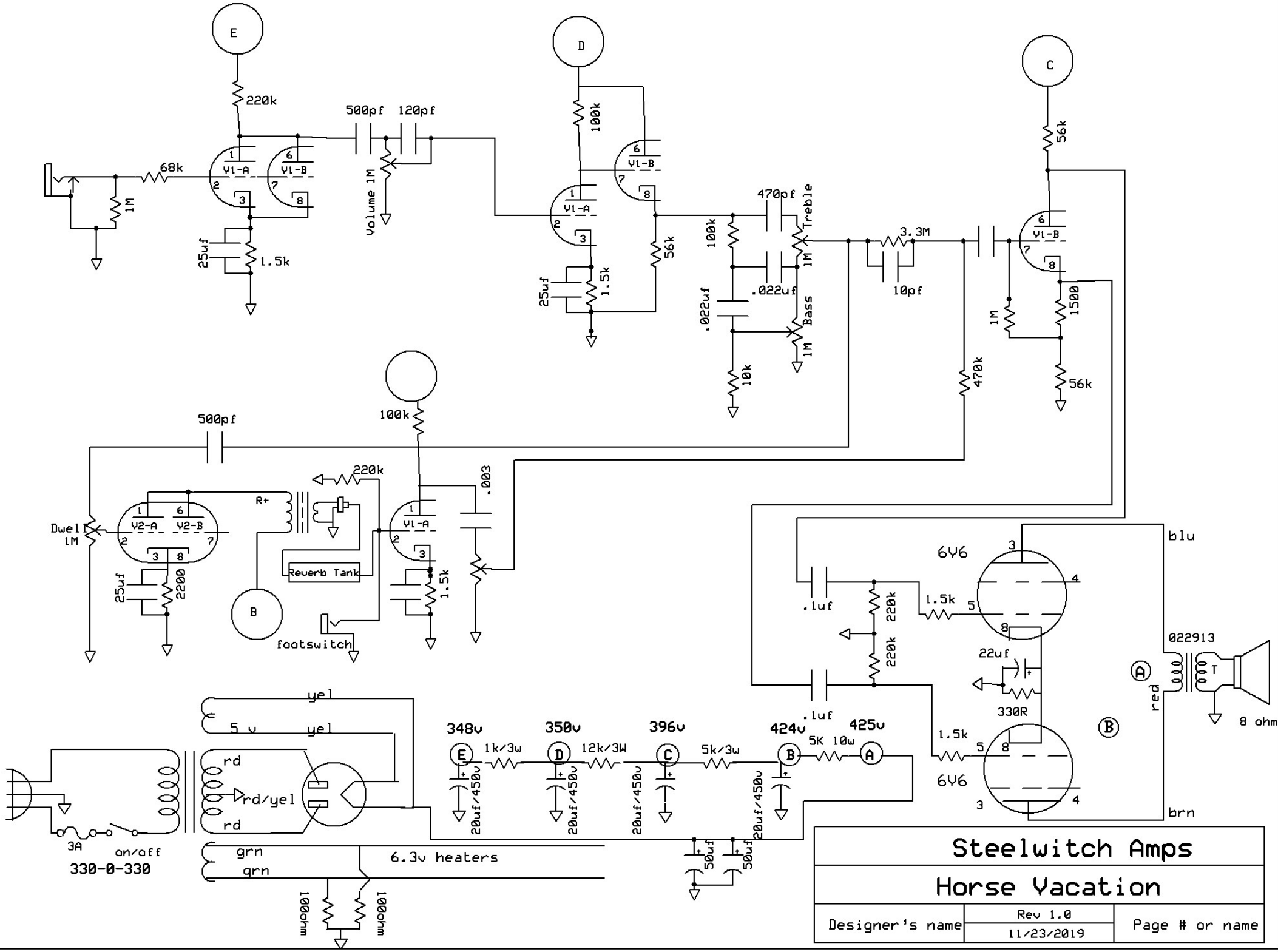
E
D
C
B
A
220k
500pf
120pf
68k
1M
V1-A
V1-B
Volume 1M
25uf
1.5k
100k
56k
470pf
Treble
1M
3.3M
10pf
.022uf
Bass
10k
470k
1500
500pf
100k
220k
.003
Dwell
1M
V2-A
V2-B
R+
2200
Reverb Tank
footswitch
6V6
.1uf
220k
1.5k
22uf
330R
022913
T
8 ohm
blu
red
brn
yel
5 v
rd
rd/yel
3A
on/off
330-0-330
grn
6.3v heaters
100ohm
348v
350v
396v
424v
425v
1k/3w
12k/3W
5k/3w
5K 10w
20uf/450v
50uf
Steelwitch Amps
Horse Vacation
Designer's name
Rev 1.0
11/23/2019
Page # or name