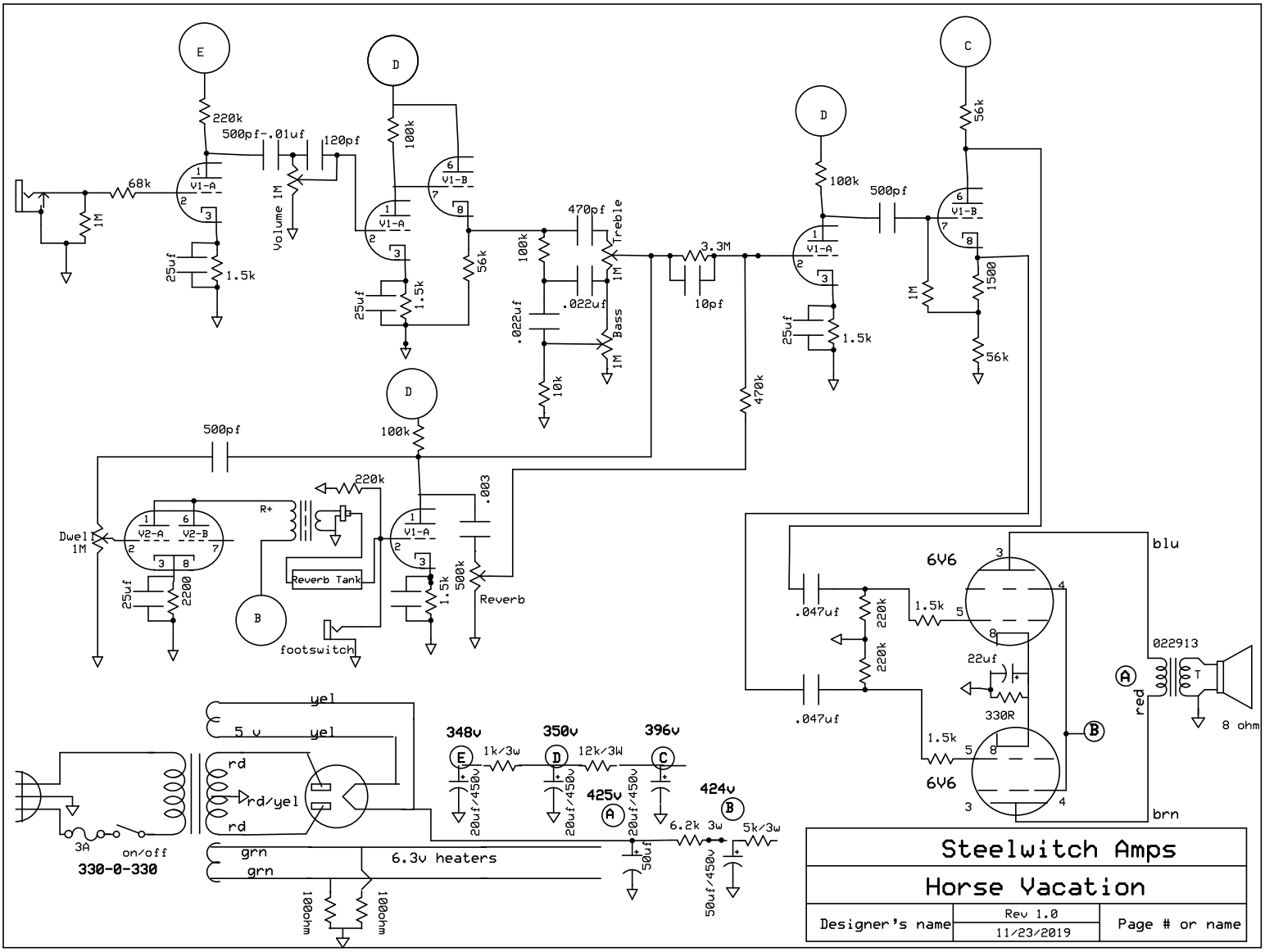
E
D
C
220k
500pf-.01uf
120pf
68k
1M
V1-A
V1-B
Volume 1M
25uf
1.5k
100k
56k
470pf
Treble
.022uf
Bass
10k
3.3M
10pf
470k
500pf
1500
Dwel 1M
V2-A
V2-B
2200
R+
Reverb Tank
footswitch
B
.003
500k
Reverb
6V6
.047uf
220k
22uf
330R
blu
brn
red
022913
T
8 ohm
A
yel
5 v
rd
rd/yel
3A
on/off
330-0-330
348v
350v
396v
425v
424v
1k/3w
12k/3W
20uf/450v
6.2k
3w
5k/3w
50uf
50uf/450v
grn
6.3v heaters
100ohm
Steelwitch Amps
Horse Vacation
Designer's name
Rev 1.0
11/23/2019
Page # or name