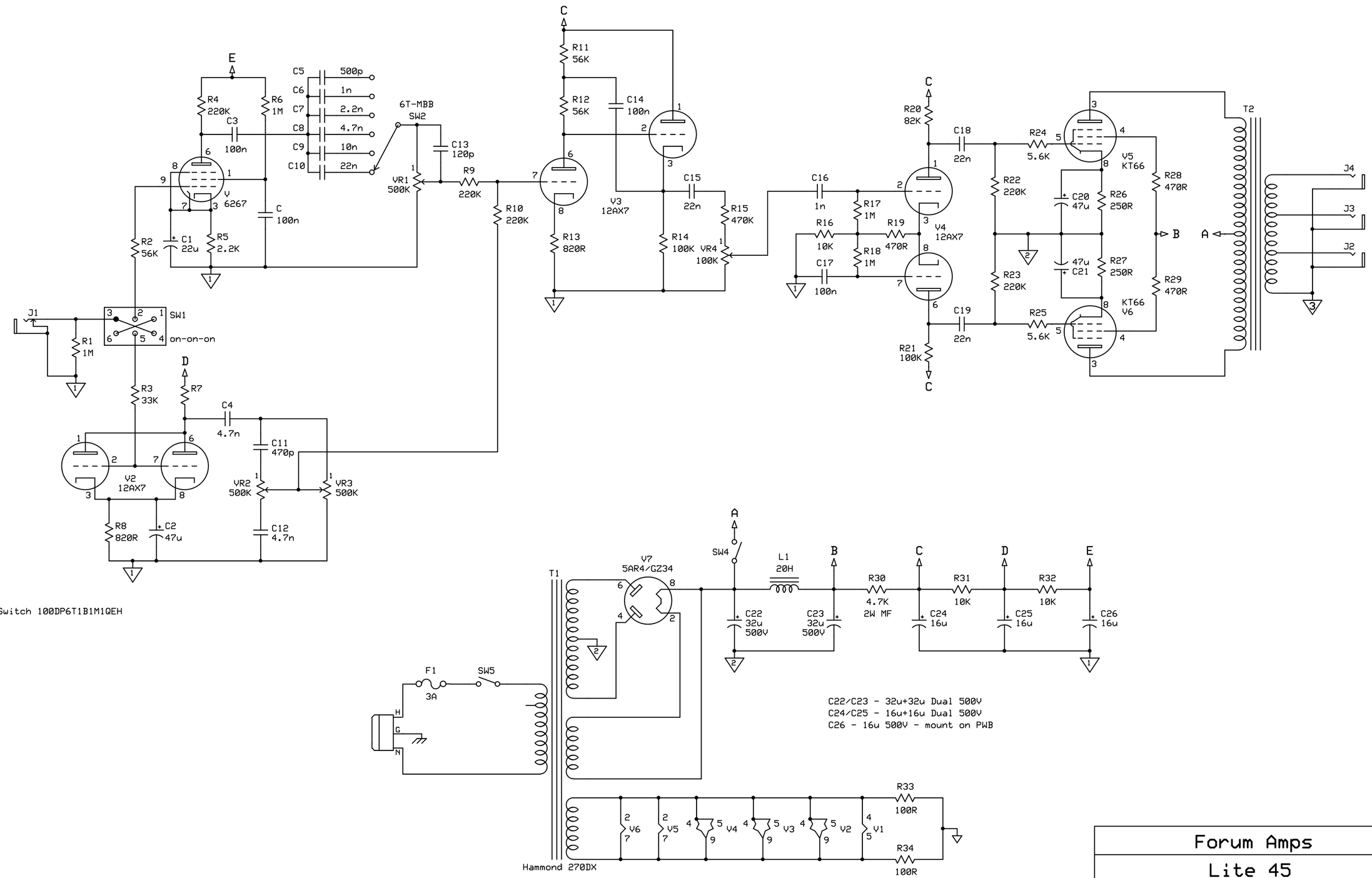

Forum Amps		
Lite 45		
P. Mitcheltree	Rev 1.0 12/2/2019	Page 1 of 1