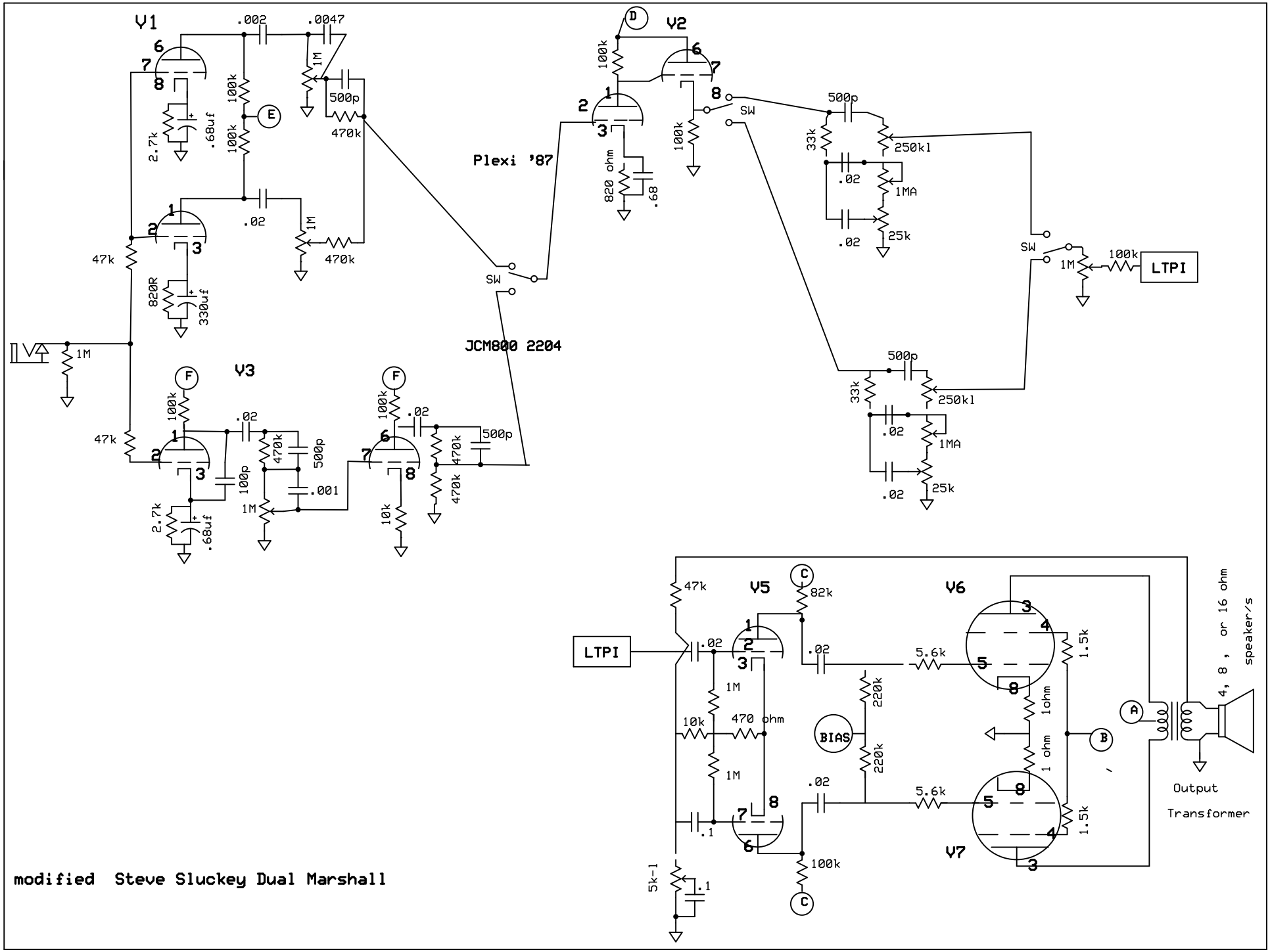
V1
V2
V3
V5
V6
V7
Plexi '87
JCM800 2204
SW
LTPI
BIAS
Output
Transformer
4, 8 , or 16 ohm
speaker's
modified Steve Sluckey Dual Marshall