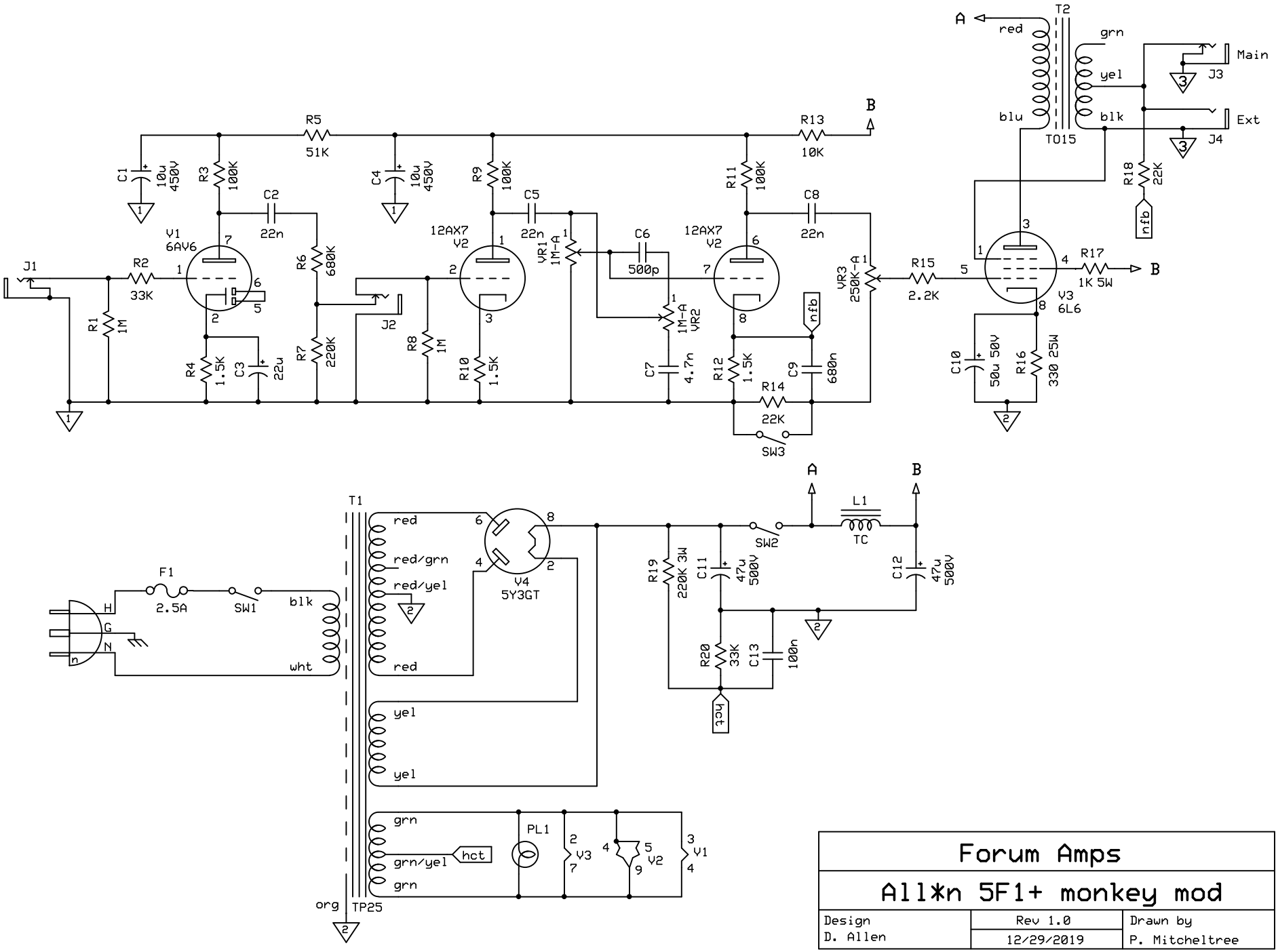

Forum Amps		
All*n 5F1+ monkey mod		
Design D. Allen	Rev 1.0 12/29/2019	Drawn by P. Mitcheltree