’67 FENDER BAND-MASTER AMP AB763
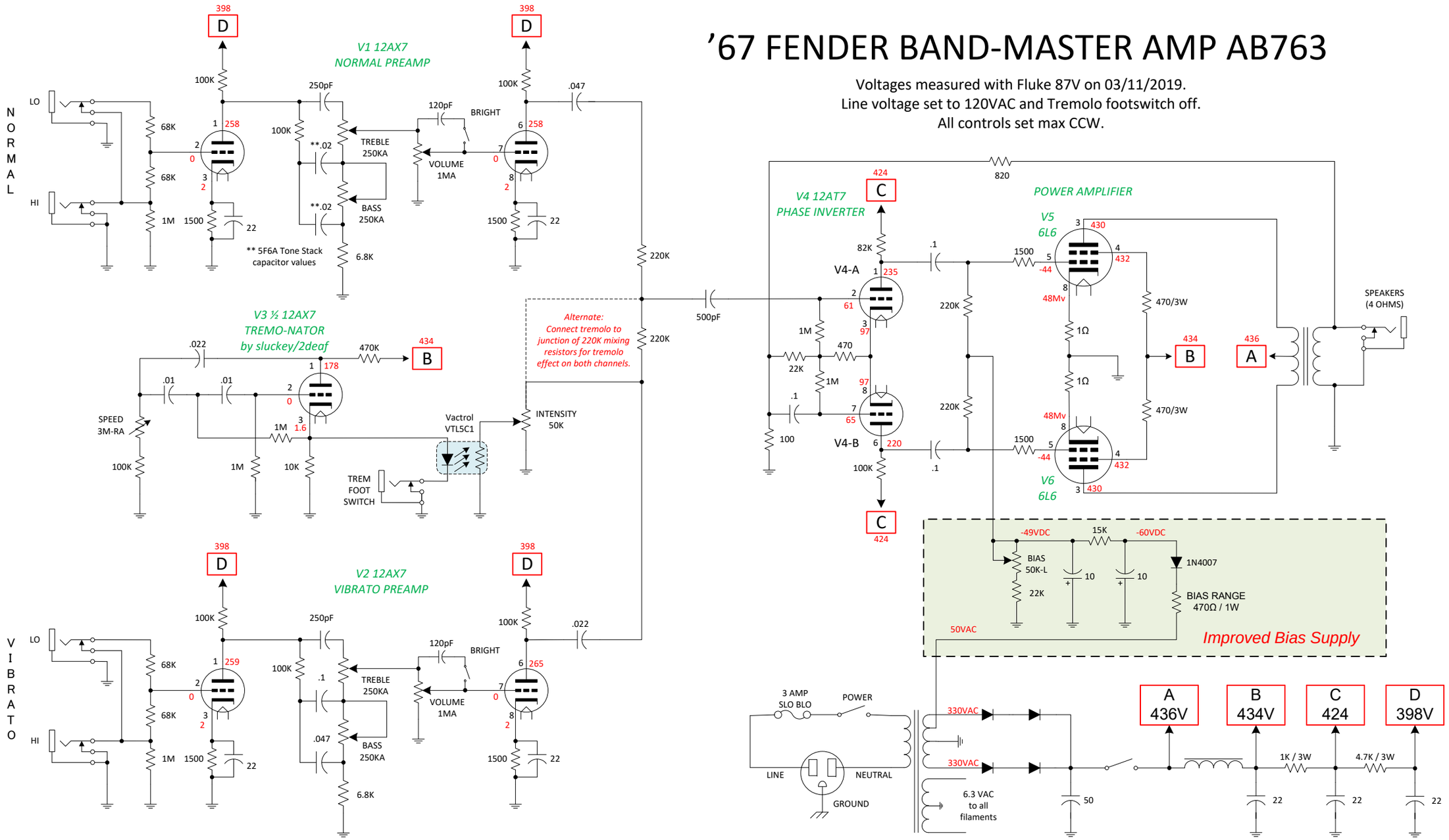
Voltages measured with Fluke 87V on 03/11/2019.
Line voltage set to 120VAC and Tremolo footswitch off.
All controls set max CCW.