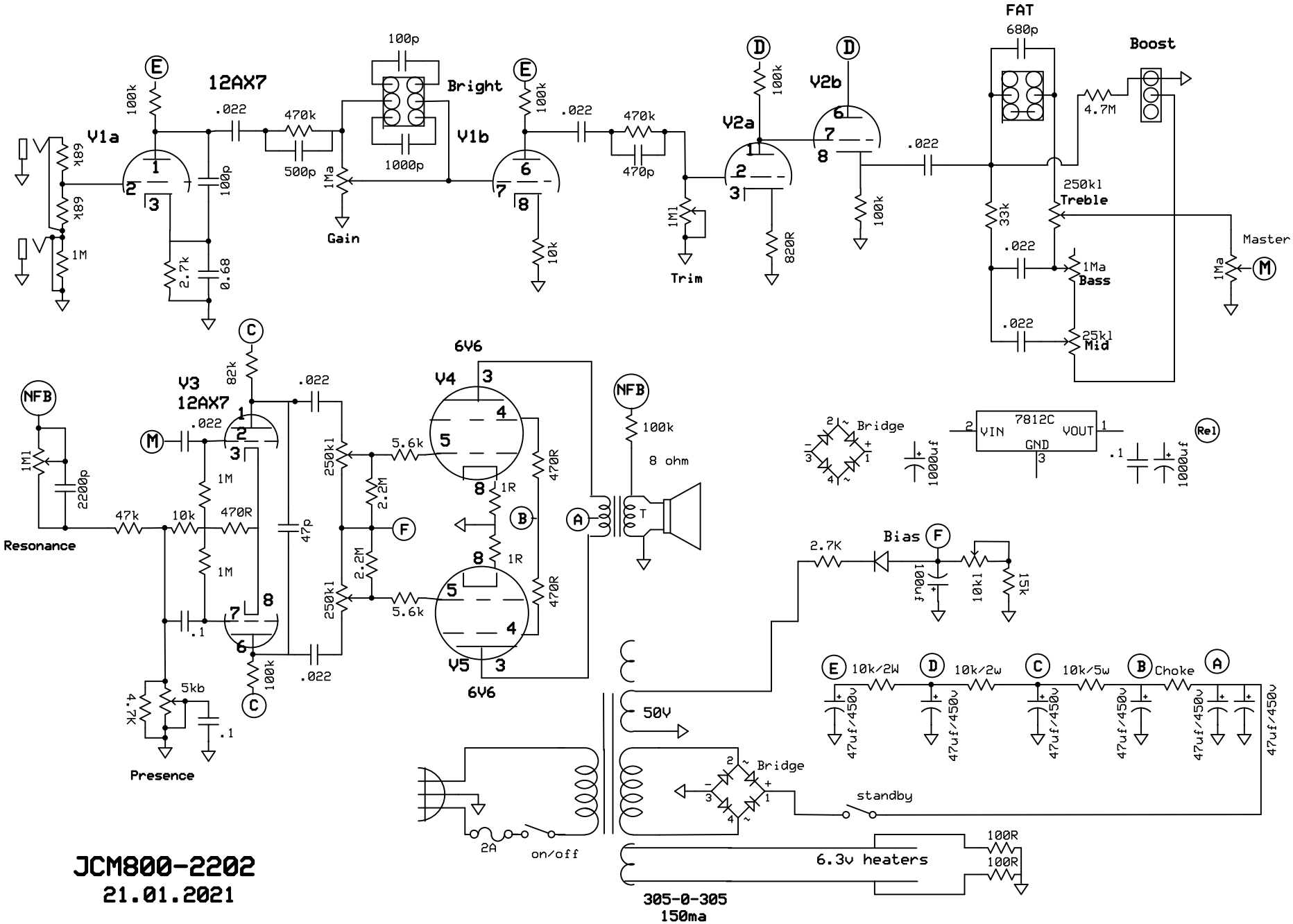

JCM800-2202

21.01.2021