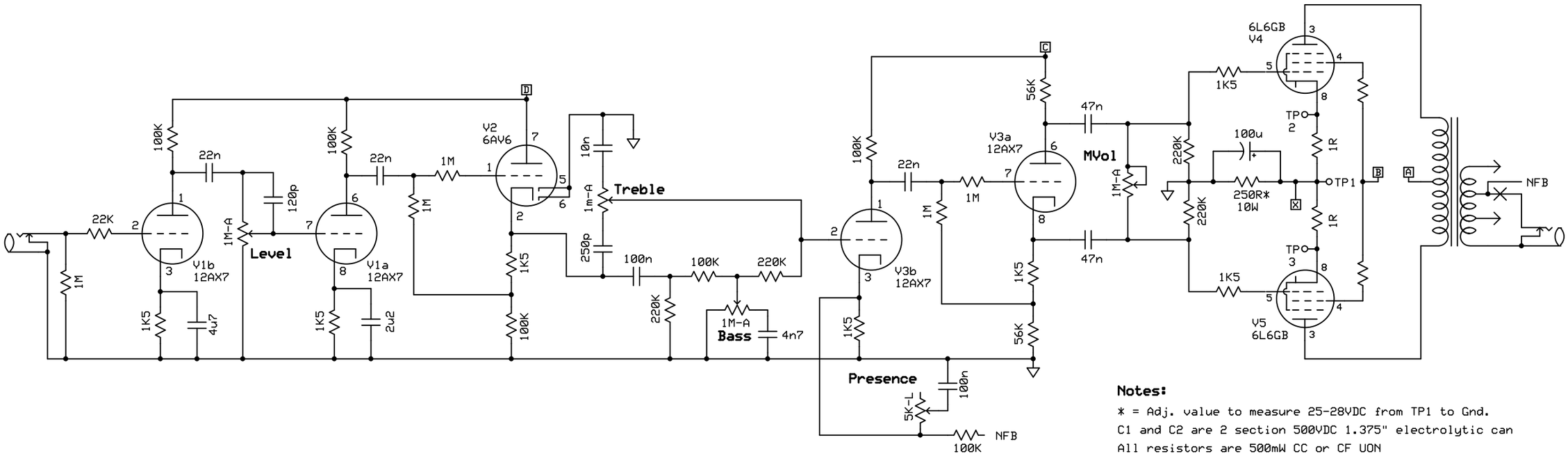

Notes:

* = Adj. value to measure 25-28VDC from TP1 to Gnd.
C1 and C2 are 2 section 500VDC 1.375" electrolytic can
All resistors are 500mW CC or CF UON
Power supply electrolytics are 450VDC min.
All coupling capacitors are 500VDC min. UON
6AX5GT rectifier tube not used - socket used for tie points.

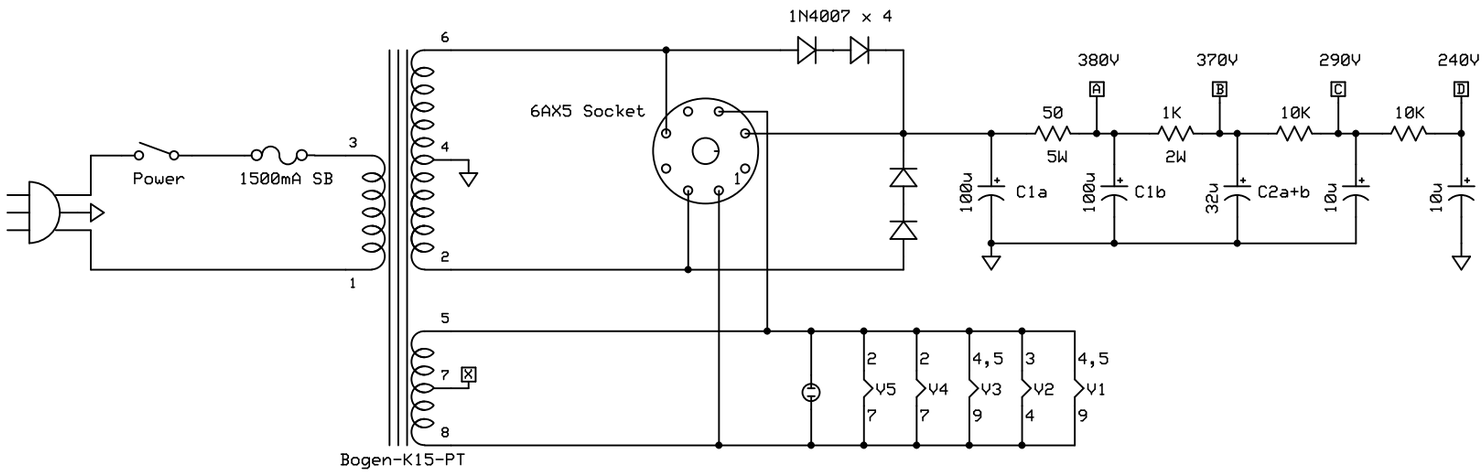

S.T.A.C.		
Bogen K-15 Hack		
H. Mitcheltree	Rev 1.0 3/18/2011	Pro 5E5A Hack