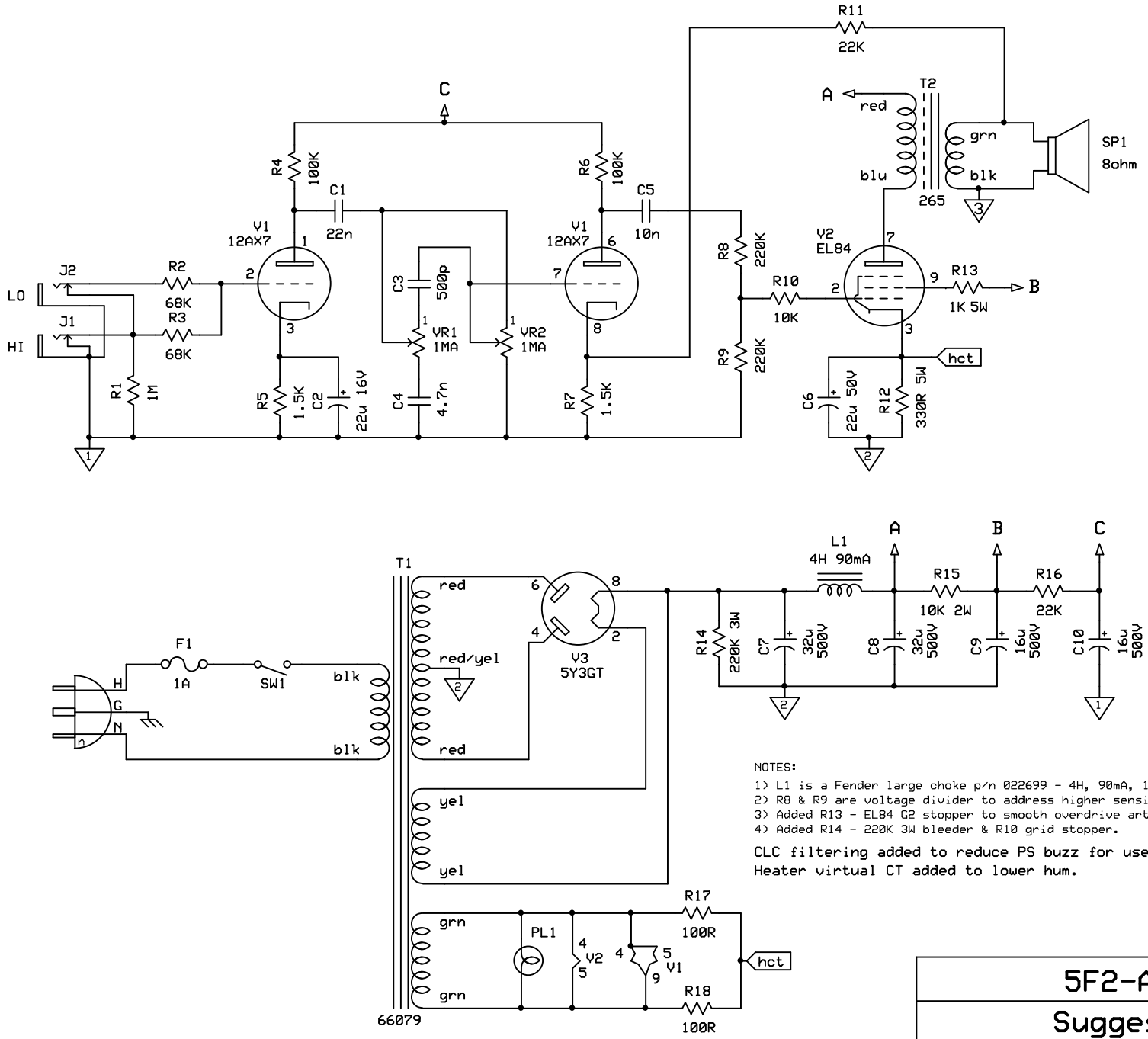

NOTES:

1) L1 is a Fender large choke p/n 022699 - 4H, 90mA, 110DCR.
2) R8 & R9 are voltage divider to address higher sensitivity of EL84 (lower drive).
3) Added R13 - EL84 G2 stopper to smooth overdrive artifacts & G2 overcurrent protection.
4) Added R14 - 220K 3W bleeder & R10 grid stopper.

CLC filtering added to reduce PS buzz for use with larger speakers.
Heater virtual CT added to lower hum.

5F2-A w/ EL84

Suggested Mods

P. Mitcheltree	Rev 1.0 2/29/2020	Page 1 of 1