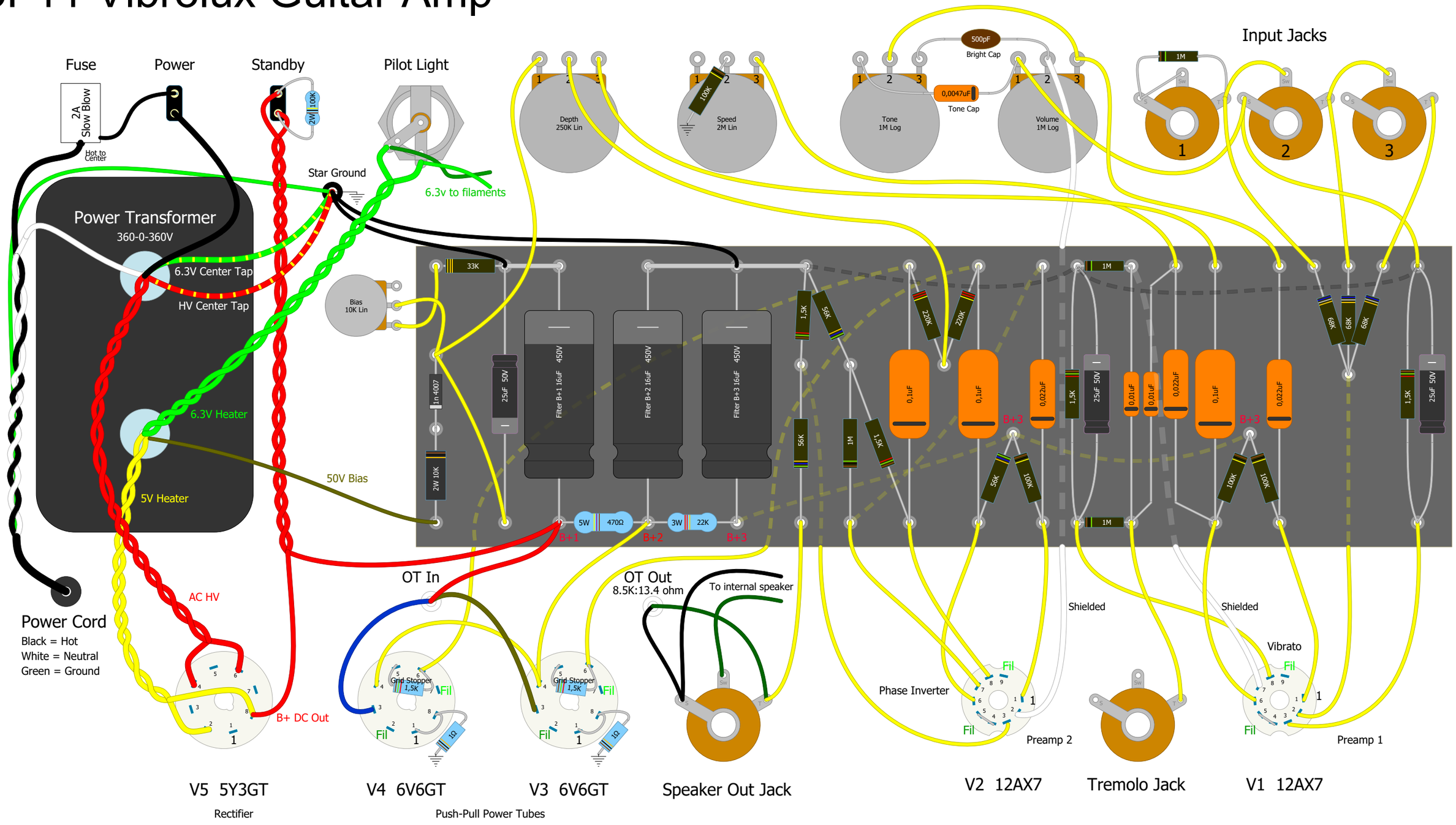# 5F11 Vibrolux Guitar Amp