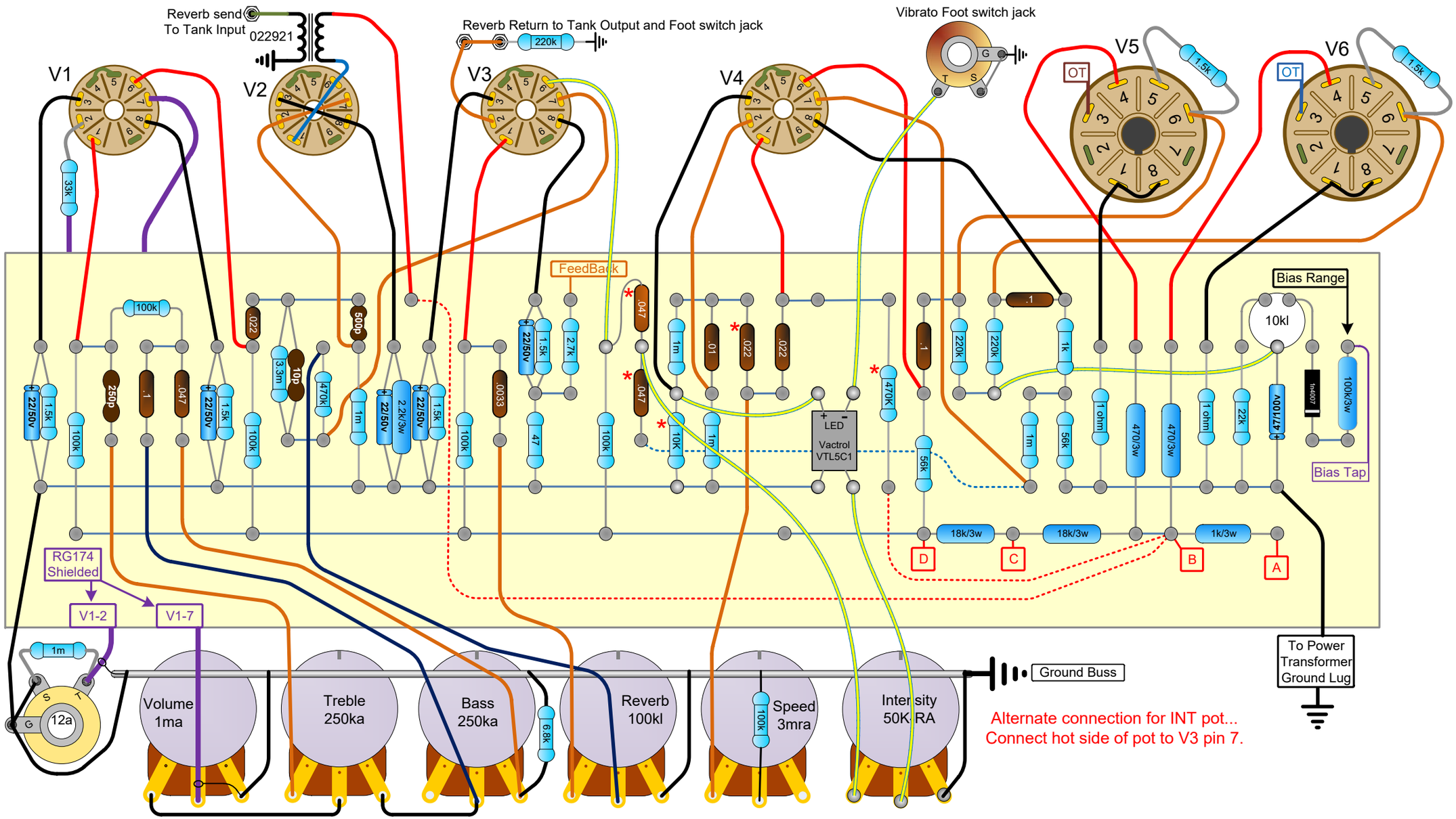

Hoffman Amplifiers Princeton Reverb With Trem-O-Nator mod
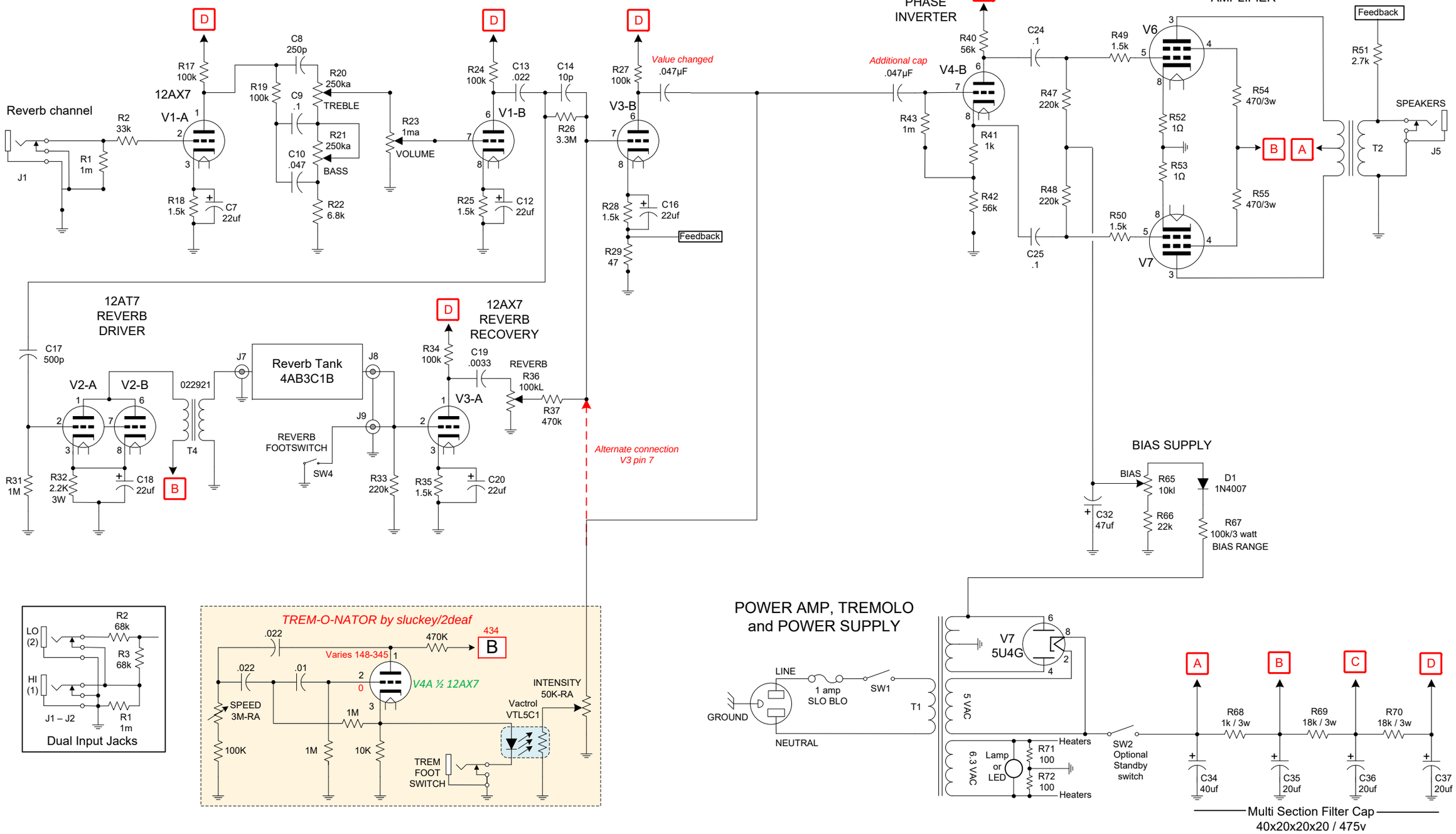
Hoffman Princeton Reverb