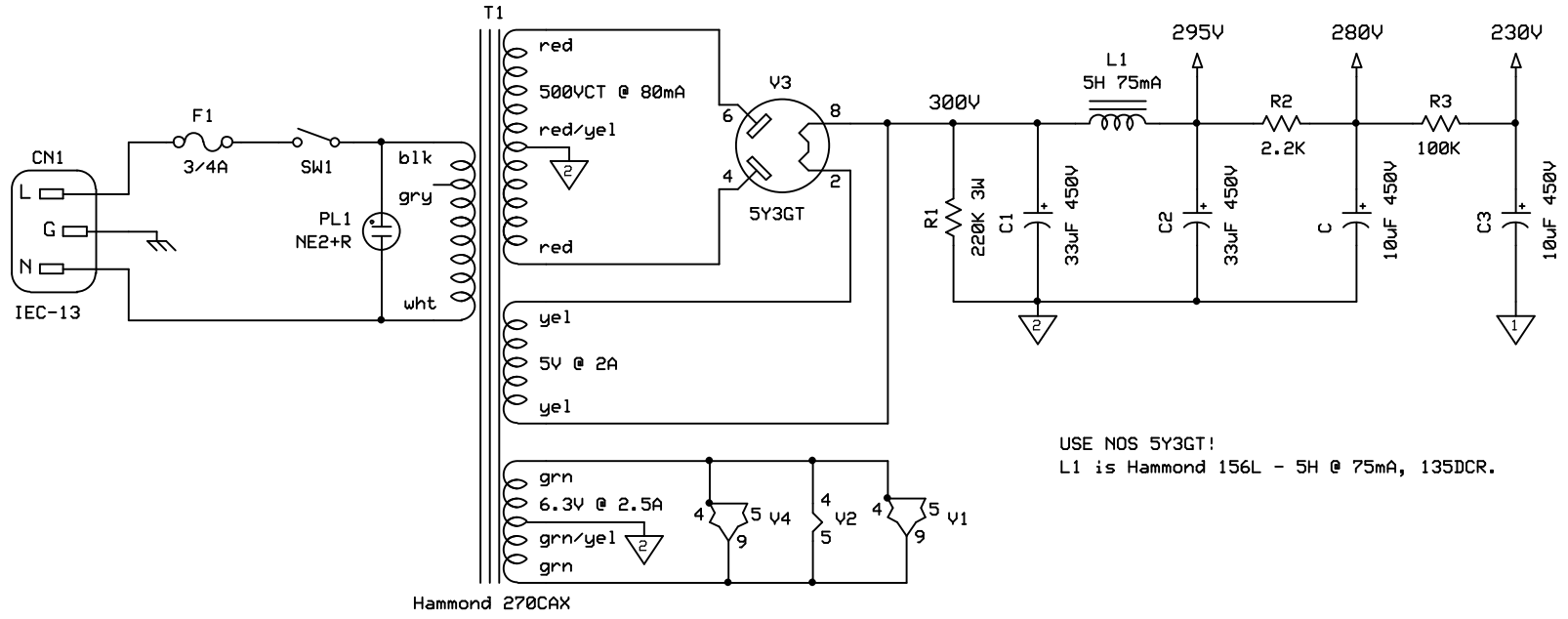

Forum Amps		
Improved Kalamazoo Model 2 PS		
P. Mitcheltree	Rev 1.0 4/8/2020	Page 1 of 1