A	INCORP. ECO 1673 & 1726	10-10-68

FENDER MODEL "BANTAM BASS – AMP CFA7003" SCHEMATIC

THIS PRODUCT MANUFACTURED UNDER ONE OR MORE OF THE FOLLOWING U.S. PATENTS-
CIRCUIT PATENT #2817708, #2973681
DESIGN PATENT #192859
(PATENTS PENDING

NOTICE

1 - VOLTAGES READ TO GROUND WITH ELECTRONIC VOLTMETER VALUES SHOWN, + OR - 20%
2 - ALL RESISTORS ½ WATT 10% TOLERANCE IF NOT SPECIFIED
3 - ALL CAPACITORS AT LEAST 400 VOLT RATING IF NOT SPECIFIED.
4 - ALL VOLTAGES READ WITH VIBRATO PEDAL GROUNDED AND NO INPUT SIGNAL
5 - (6V) REFERS TO AC VOLTAGES

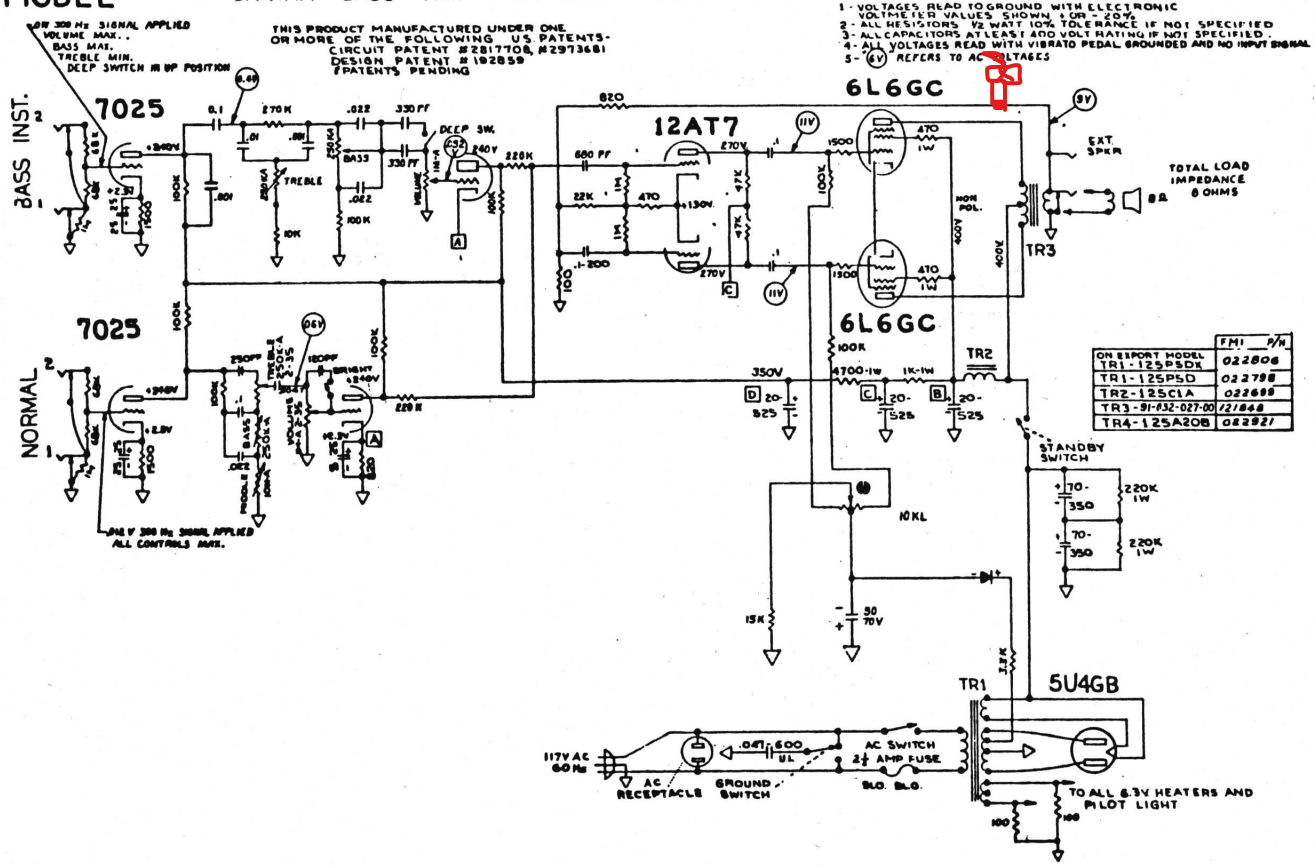
BASS INST.
NORMAL
7025
7025
12AT7
6L6GC
6L6GC
5U4GB
TR1
TR2
TR3
EXT. SPKR
TOTAL LOAD IMPEDANCE 8 OHMS
8Ω
DEEP SW.
TREBLE
BASS
VOLUME
BRIGHT
STANDBY SWITCH
10KL
117V AC 60 Hz
AC RECEPTACLE
GROUND SWITCH
AC SWITCH
2½ AMP FUSE
SLO. BLO.
TO ALL 6.3V HEATERS AND PILOT LIGHT
350V
+240V
+280V
+270V
+130V
+2.3V
+6.3V
220K 1W
220K 1W
10K
15K
30 70V
100K
470 1W
470 1W
4700-1W
1K-1W
20-525
20-525
20-525
70-350
70-350
NON POL.
400V
.047
600 UL
.1
.01
.001
270K
.022
330 PF
820
680 PF
22K
470
1M
1M
.1-200
100
1500
1300
47K
47K
220K
250K
100K
330K
250PF
180PF
250K-A
250K-B
250K-C
250K-D
250K-E
250K-F
250K-G
250K-H
250K-J
250K-K
250K-L
250K-M
250K-N
250K-P
250K-Q
250K-R
250K-S
250K-T
250K-U
250K-V
250K-W
250K-X
250K-Y
250K-Z
250K-AA
250K-BB
250K-CC
250K-DD
250K-EE
250K-FF
250K-GG
250K-HH
250K-II
250K-JJ
250K-KK
250K-LL
250K-MM
250K-NN
250K-OO
250K-PP
250K-QQ
250K-RR
250K-SS
250K-TT
250K-UU
250K-VV
250K-WW
250K-XX
250K-YY
250K-ZZ
250K-AAA
250K-BBB
250K-CCC
250K-DDD
250K-EEE
250K-FFF
250K-GGG
250K-HHH
250K-III
250K-JJJ
250K-KKK
250K-LLL
250K-MMM
250K-NNN
250K-OOO
250K-PPP
250K-QQQ
250K-RRR
250K-SSS
250K-TTT
250K-UUU
250K-VVV
250K-WWW
250K-XXX
250K-YYY
250K-ZZZ
250K-AAAA
250K-BBBB
250K-CCCC
250K-DDDD
250K-EEEE
250K-FFFF
250K-GGGG
250K-HHHH
250K-IIII
250K-JJJJ
250K-KKKK
250K-LLLL
250K-MMMM
250K-NNNN
250K-OOOO
250K-PPPP
250K-QQQQ
250K-RRRR
250K-SSSS
250K-TTTT
250K-UUUU
250K-VVVV
250K-WWWW
250K-XXXX
250K-YYYY
250K-ZZZZ
250K-AAAAA
250K-BBBBB
250K-CCCCC
250K-DDDDD
250K-EEEEE
250K-FFFFF
250K-GGGGG
250K-HHHHH
250K-IIIII
250K-JJJJJ
250K-KKKKK
250K-LLLLL
250K-MMMMM
250K-NNNNN
250K-OOOOO
250K-PPPPP
250K-QQQQQ
250K-RRRRR
250K-SSSSS
250K-TTTTT
250K-UUUUU
250K-VVVVV
250K-WWWWW
250K-XXXXX
250K-YYYYY
250K-ZZZZZ
250K-AAAAAA
250K-BBBBBB
250K-CCCCCC
250K-DDDDDD
250K-EEEEEE
250K-FFFFFF
250K-GGGGGG
250K-HHHHHH
250K-IIIIII
250K-JJJJJJ
250K-KKKKKK
250K-LLLLLL
250K-MMMMMM
250K-NNNNNN
250K-OOOOOO
250K-PPPPPP
250K-QQQQQQ
250K-RRRRRR
250K-SSSSSS
250K-TTTTTT
250K-UUUUUU
250K-VVVVVV
250K-WWWWWW
250K-XXXXXX
250K-YYYYYY
250K-ZZZZZZ
250K-AAAAAAA
250K-BBBBBBB
250K-CCCCCCC
250K-DDDDDDD
250K-EEEEEEE
250K-FFFFFFF
250K-GGGGGGG
250K-HHHHHHH
250K-IIIIIIII
250K-JJJJJJJ
250K-KKKKKKK
250K-LLLLLLL
250K-MMMMMMM
250K-NNNNNNN
250K-OOOOOOO
250K-PPPPPPP
250K-QQQQQQQ
250K-RRRRRRR
250K-SSSSSSS
250K-TTTTTTT
250K-UUUUUUU
250K-VVVVVVV
250K-WWWWWWW
250K-XXXXXXX
250K-YYYYYYY
250K-ZZZZZZZ
250K-AAAAAAAA
250K-BBBBBBBB
250K-CCCCCCCC
250K-DDDDDDDD
250K-EEEEEEEE
250K-FFFFFFFF
250K-GGGGGGGG
250K-HHHHHHHH
250K-IIIIIIIII
250K-JJJJJJJJ
250K-KKKKKKKK
250K-LLLLLLLL
250K-MMMMMMMM
250K-NNNNNNNN
250K-OOOOOOOO
250K-PPPPPPPP
250K-QQQQQQQQ
250K-RRRRRRRR
250K-SSSSSSSS
250K-TTTTTTTT
250K-UUUUUUUU
250K-VVVVVVVV
250K-WWWWWWWW
250K-XXXXXXXX
250K-YYYYYYYY
250K-ZZZZZZZZ
250K-AAAAAAAAA
250K-BBBBBBBBB
250K-CCCCCCCCC
250K-DDDDDDDDD
250K-EEEEEEEEE
250K-FFFFFFFFF
250K-GGGGGGGGG
250K-HHHHHHHHH
250K-IIIIIIIIII
250K-JJJJJJJJJ
250K-KKKKKKKKK
250K-LLLLLLLLL
250K-MMMMMMMMM
250K-NNNNNNNNN
250K-OOOOOOOOO
250K-PPPPPPPPP
250K-QQQQQQQQQ
250K-RRRRRRRRR
250K-SSSSSSSSS
250K-TTTTTTTTT
250K-UUUUUUUUU
250K-VVVVVVVVV
250K-WWWWWWWWW
250K-XXXXXXXXX
250K-YYYYYYYYY
250K-ZZZZZZZZZ
250K-AAAAAAAAAA
250K-BBBBBBBBBB
250K-CCCCCCCCCC
250K-DDDDDDDDDD
250K-EEEEEEEEEE
250K-FFFFFFFFFF
250K-GGGGGGGGGG
250K-HHHHHHHHHH
250K-IIIIIIIIIII
250K-JJJJJJJJJJ
250K-KKKKKKKKKK
250K-LLLLLLLLLL
250K-MMMMMMMMMM
250K-NNNNNNNNNN
250K-OOOOOOOOOO
250K-PPPPPPPPPP
250K-QQQQQQQQQQ
250K-RRRRRRRRRR
250K-SSSSSSSSSS
250K-TTTTTTTTTT
250K-UUUUUUUUUU
250K-VVVVVVVVVV
250K-WWWWWWWWWW
250K-XXXXXXXXXX
250K-YYYYYYYYYY
250K-ZZZZZZZZZZ
250K-AAAAAAAAAAA
250K-BBBBBBBBBBB
250K-CCCCCCCCCCC
250K-DDDDDDDDDDD
250K-EEEEEEEEEEE
250K-FFFFFFFFFFF
250K-GGGGGGGGGGG
250K-HHHHHHHHHHH
250K-IIIIIIIIIIII
250K-JJJJJJJJJJJ
250K-KKKKKKKKKKK
250K-LLLLLLLLLLL
250K-MMMMMMMMMMM
250K-NNNNNNNNNNN
250K-OOOOOOOOOOO
250K-PPPPPPPPPPP
250K-QQQQQQQQQQQ
250K-RRRRRRRRRRR
250K-SSSSSSSSSSS
250K-TTTTTTTTTTT
250K-UUUUUUUUUUU
250K-VVVVVVVVVVV
250K-WWWWWWWWWWW
250K-XXXXXXXXXXX
250K-YYYYYYYYYYY
250K-ZZZZZZZZZZZ
250K-AAAAAAAAAAAA
250K-BBBBBBBBBBBB
250K-CCCCCCCCCCCC
250K-DDDDDDDDDDDD
250K-EEEEEEEEEEEE
250K-FFFFFFFFFFFF
250K-GGGGGGGGGGGG
250K-HHHHHHHHHHHH
250K-IIIIIIIIIIIII
250K-JJJJJJJJJJJJ
250K-KKKKKKKKKKKK
250K-LLLLLLLLLLLL
250K-MMMMMMMMMMMM
250K-NNNNNNNNNNNN
250K-OOOOOOOOOOOO
250K-PPPPPPPPPPPP
250K-QQQQQQQQQQQQ
250K-RRRRRRRRRRRR
250K-SSSSSSSSSSSS
250K-TTTTTTTTTTTT
250K-UUUUUUUUUUUU
250K-VVVVVVVVVVVV
250K-WWWWWWWWWWWW
250K-XXXXXXXXXXXX
250K-YYYYYYYYYYYY
250K-ZZZZZZZZZZZZ
250K-AAAAAAAAAAAAA
250K-BBBBBBBBBBBBB
250K-CCCCCCCCCCCCC
250K-DDDDDDDDDDDDD
250K-EEEEEEEEEEEEE
250K-FFFFFFFFFFFFF
250K-GGGGGGGGGGGGG
250K-HHHHHHHHHHHHH
250K-IIIIIIIIIIIIII
250K-JJJJJJJJJJJJJ
250K-KKKKKKKKKKKKK
250K-LLLLLLLLLLLLL
250K-MMMMMMMMMMMMM
250K-NNNNNNNNNNNNN
250K-OOOOOOOOOOOOO
250K-PPPPPPPPPPPPP
250K-QQQQQQQQQQQQQ
250K-RRRRRRRRRRRRR
250K-SSSSSSSSSSSSS
250K-TTTTTTTTTTTTT
250K-UUUUUUUUUUUUU
250K-VVVVVVVVVVVVV
250K-WWWWWWWWWWWWW
250K-XXXXXXXXXXXXX
250K-YYYYYYYYYYYYY
250K-ZZZZZZZZZZZZZ
250K-AAAAAAAAAAAAAA
250K-BBBBBBBBBBBBBB
250K-CCCCCCCCCCCCCC
250K-DDDDDDDDDDDDDD
250K-EEEEEEEEEEEEEE
250K-FFFFFFFFFFFFFF
250K-GGGGGGGGGGGGGG
250K-HHHHHHHHHHHHHH
250K-IIIIIIIIIIIIIII
250K-JJJJJJJJJJJJJJ
250K-KKKKKKKKKKKKKK
250K-LLLLLLLLLLLLLL
250K-MMMMMMMMMMMMMM
250K-NNNNNNNNNNNNNN
250K-OOOOOOOOOOOOOO
250K-PPPPPPPPPPPPPP
250K-QQQQQQQQQQQQQQ
250K-RRRRRRRRRRRRRR
250K-SSSSSSSSSSSSSS
250K-TTTTTTTTTTTTTT
250K-UUUUUUUUUUUUUU
250K-VVVVVVVVVVVVVV
250K-WWWWWWWWWWWWWW
250K-XXXXXXXXXXXXXX
250K-YYYYYYYYYYYYYY
250K-ZZZZZZZZZZZZZZ
250K-AAAAAAAAAAAAAAA
250K-BBBBBBBBBBBBBBB
250K-CCCCCCCCCCCCCCC
250K-DDDDDDDDDDDDDDD
250K-EEEEEEEEEEEEEEE
250K-FFFFFFFFFFFFFFF
250K-GGGGGGGGGGGGGGG
250K-HHHHHHHHHHHHHHH
250K-IIIIIIIIIIIIIIII
250K-JJJJJJJJJJJJJJJ
250K-KKKKKKKKKKKKKKK
250K-LLLLLLLLLLLLLLL
250K-MMMMMMMMMMMMMMM
250K-NNNNNNNNNNNNNNN
250K-OOOOOOOOOOOOOOO
250K-PPPPPPPPPPPPPPP
250K-QQQQQQQQQQQQQQQ
250K-RRRRRRRRRRRRRRR
250K-SSSSSSSSSSSSSSS
250K-TTTTTTTTTTTTTTT
250K-UUUUUUUUUUUUUUU
250K-VVVVVVVVVVVVVVV
250K-WWWWWWWWWWWWWWW
250K-XXXXXXXXXXXXXXX
250K-YYYYYYYYYYYYYYY
250K-ZZZZZZZZZZZZZZZ
250K-AAAAAAAAAAAAAAAA
250K-BBBBBBBBBBBBBBBB
250K-CCCCCCCCCCCCCCCC
250K-DDDDDDDDDDDDDDDD
250K-EEEEEEEEEEEEEEEE
250K-FFFFFFFFFFFFFFFF
250K-GGGGGGGGGGGGGGGG
250K-HHHHHHHHHHHHHHHH
250K-IIIIIIIIIIIIIIIII
250K-JJJJJJJJJJJJJJJJ
250K-KKKKKKKKKKKKKKKK
250K-LLLLLLLLLLLLLLLL
250K-MMMMMMMMMMMMMMMM
250K-NNNNNNNNNNNNNNNN
250K-OOOOOOOOOOOOOOOO
250K-PPPPPPPPPPPPPPPP
250K-QQQQQQQQQQQQQQQQ
250K-RRRRRRRRRRRRRRRR
250K-SSSSSSSSSSSSSSSS
250K-TTTTTTTTTTTTTTTT
250K-UUUUUUUUUUUUUUUU
250K-VVVVVVVVVVVVVVVV
250K-WWWWWWWWWWWWWWWW
250K-XXXXXXXXXXXXXXXX
250K-YYYYYYYYYYYYYYYY
250K-ZZZZZZZZZZZZZZZZ
250K-AAAAAAAAAAAAAAAAA
250K-BBBBBBBBBBBBBBBBB
250K-CCCCCCCCCCCCCCCCC
250K-DDDDDDDDDDDDDDDDD
250K-EEEEEEEEEEEEEEEEE
250K-FFFFFFFFFFFFFFFFF
250K-GGGGGGGGGGGGGGGGG
250K-HHHHHHHHHHHHHHHHH
250K-IIIIIIIIIIIIIIIIII
250K-JJJJJJJJJJJJJJJJJ
250K-KKKKKKKKKKKKKKKKK
250K-LLLLLLLLLLLLLLLLL
250K-MMMMMMMMMMMMMMMMM
250K-NNNNNNNNNNNNNNNNN
250K-OOOOOOOOOOOOOOOOO
250K-PPPPPPPPPPPPPPPPP
250K-QQQQQQQQQQQQQQQQQ
250K-RRRRRRRRRRRRRRRRR
250K-SSSSSSSSSSSSSSSSS
250K-TTTTTTTTTTTTTTTTT
250K-UUUUUUUUUUUUUUUUU
250K-VVVVVVVVVVVVVVVVV
250K-WWWWWWWWWWWWWWWWW
250K-XXXXXXXXXXXXXXXXX
250K-YYYYYYYYYYYYYYYYY
250K-ZZZZZZZZZZZZZZZZZ
250K-AAAAAAAAAAAAAAAAAA
250K-BBBBBBBBBBBBBBBBBB
250K-CCCCCCCCCCCCCCCCCC
250K-DDDDDDDDDDDDDDDDDD
250K-EEEEEEEEEEEEEEEEEE
250K-FFFFFFFFFFFFFFFFFF
250K-GGGGGGGGGGGGGGGGGG
250K-HHHHHHHHHHHHHHHHHH
250K-IIIIIIIIIIIIIIIIIII
250K-JJJJJJJJJJJJJJJJJJ
250K-KKKKKKKKKKKKKKKKKK
250K-LLLLLLLLLLLLLLLLLL
250K-MMMMMMMMMMMMMMMMMM
250K-NNNNNNNNNNNNNNNNNN
250K-OOOOOOOOOOOOOOOOOO
250K-PPPPPPPPPPPPPPPPPP
250K-QQQQQQQQQQQQQQQQQQ
250K-RRRRRRRRRRRRRRRRRR
250K-SSSSSSSSSSSSSSSSSS
250K-TTTTTTTTTTTTTTTTTT
250K-UUUUUUUUUUUUUUUUUU
250K-VVVVVVVVVVVVVVVVVV
250K-WWWWWWWWWWWWWWWWWW
250K-XXXXXXXXXXXXXXXXXX
250K-YYYYYYYYYYYYYYYYYY
250K-Z

FENDER MODEL "BANTAM BASS-AMP CFA7003" LAYOUT

NOTICE

VOLTAGES READ TO GROUND WITH ELECTRONIC VOLTMETER WITH VIBRATO-GROUNDED & NO INPUT SIGNAL.

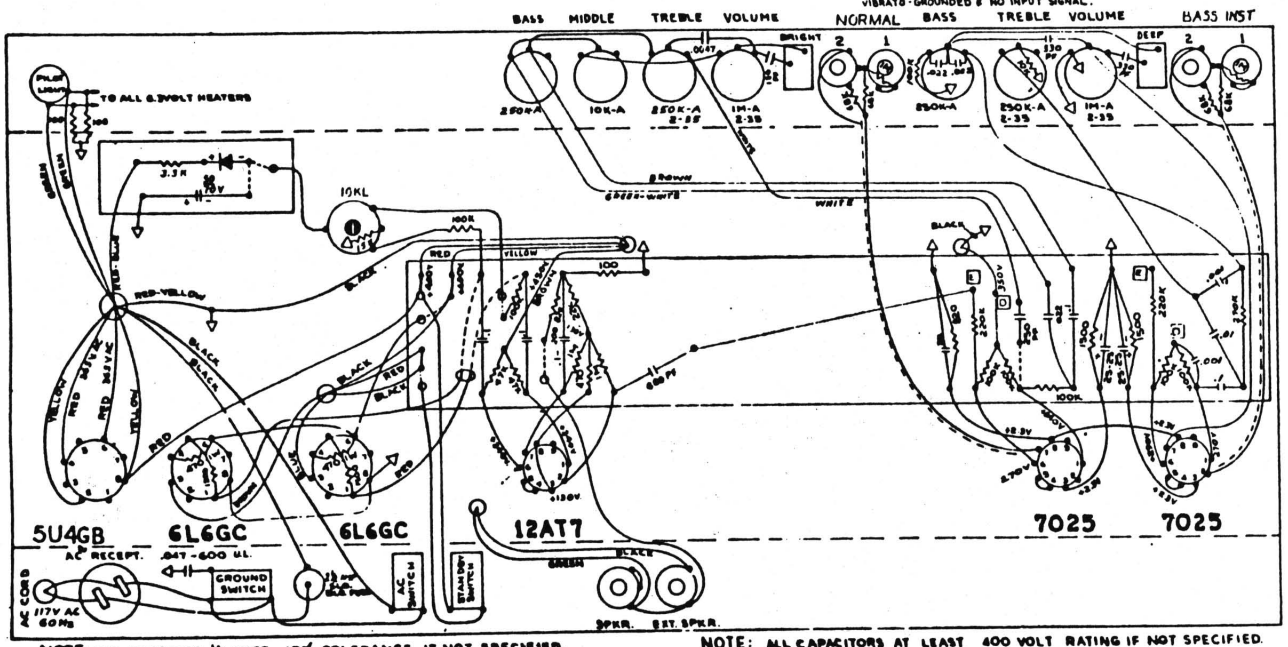

NOTE: ALL RESISTORS ½ WATT 10% TOLERANCE, IF NOT SPECIFIED.

NOTE: ALL CAPACITORS AT LEAST 400 VOLT RATING IF NOT SPECIFIED.

NEXT ASSY NO.	USED ON