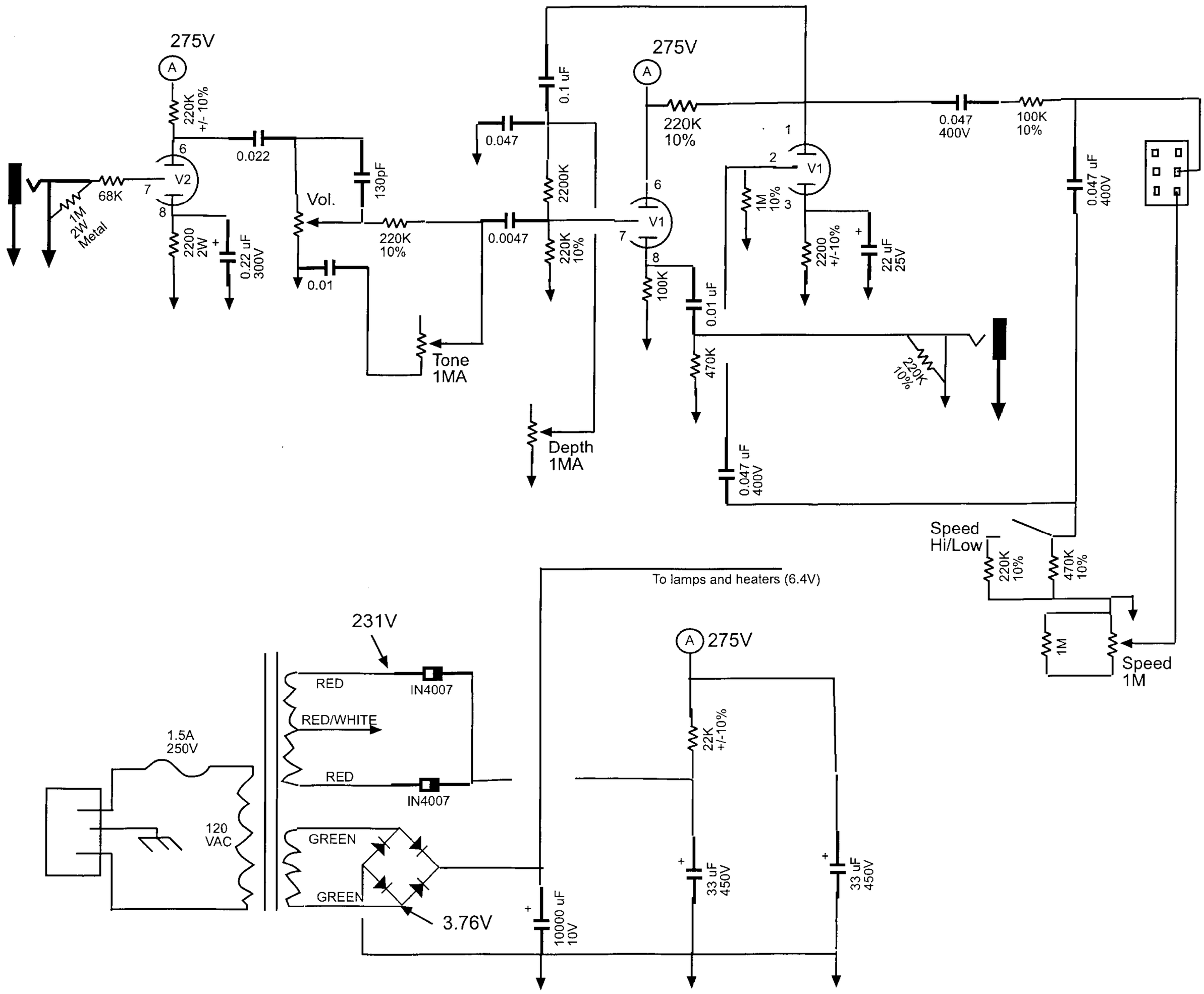

Valves are 12AX7WB
All resistors are 1W carbon comp, +/- 5%, unless stated otherwise
All caps are 600V, +/- 5%, unless stated otherwise