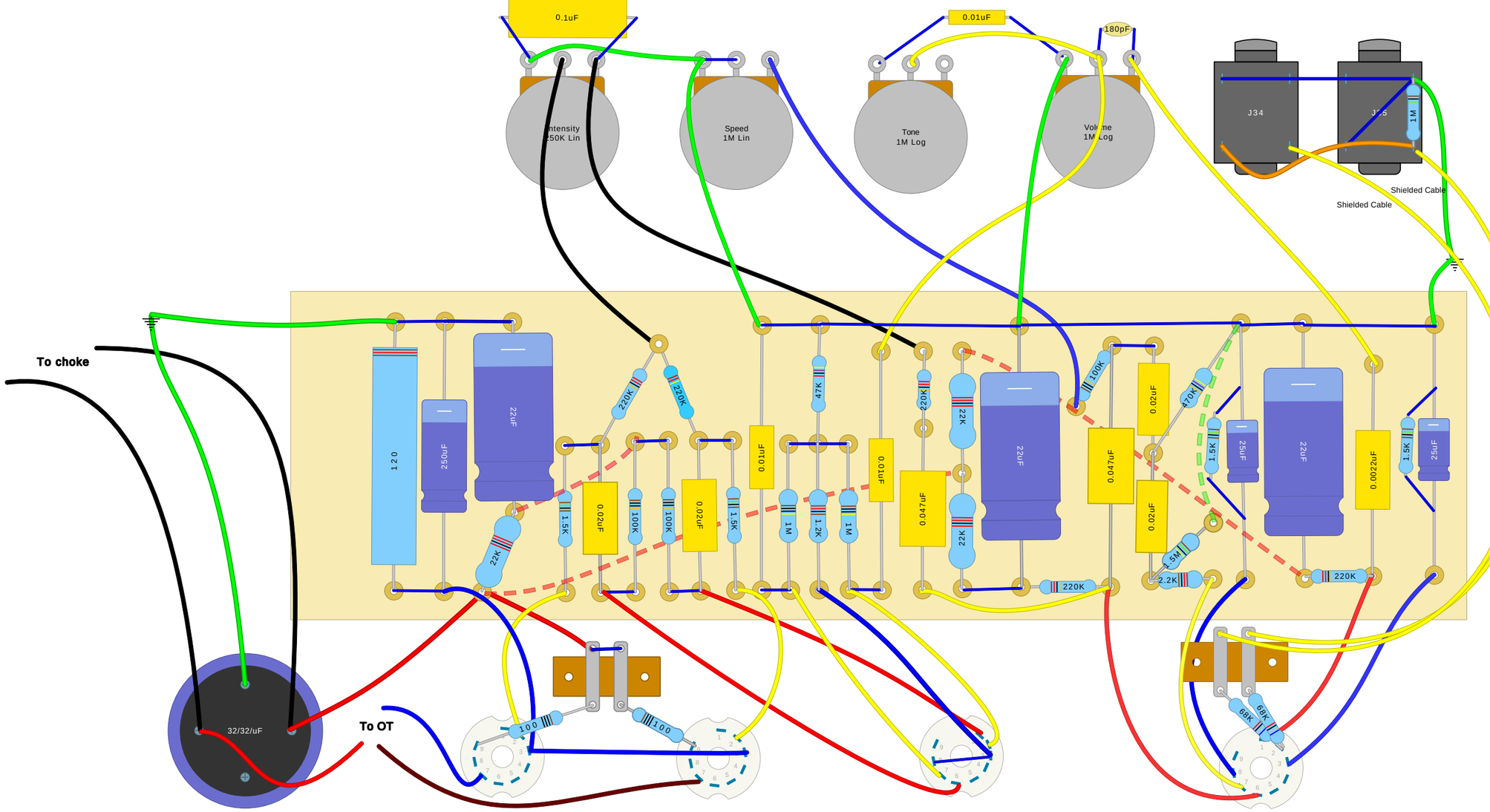
0.1uF
0.01uF
180pF
Intensity
250K Lin
Speed
1M Lin
Tone
1M Log
Volume
1M Log
J34
J35
1M
Shielded Cable
Shielded Cable
To choke
120
250uF
22uF
22K
220K
220K
1.5K
0.02uF
100K
100K
0.02uF
1.5K
0.10uF
47K
1M
1.2K
1M
0.01uF
220K
0.047uF
22K
22K
22uF
220K
100K
0.047uF
0.02uF
0.02uF
470K
1.5K
1.5M
2.2K
25uF
22uF
220K
0.0022uF
1.5K
25uF
32/32/uF
To OT
100
100
68K
68K