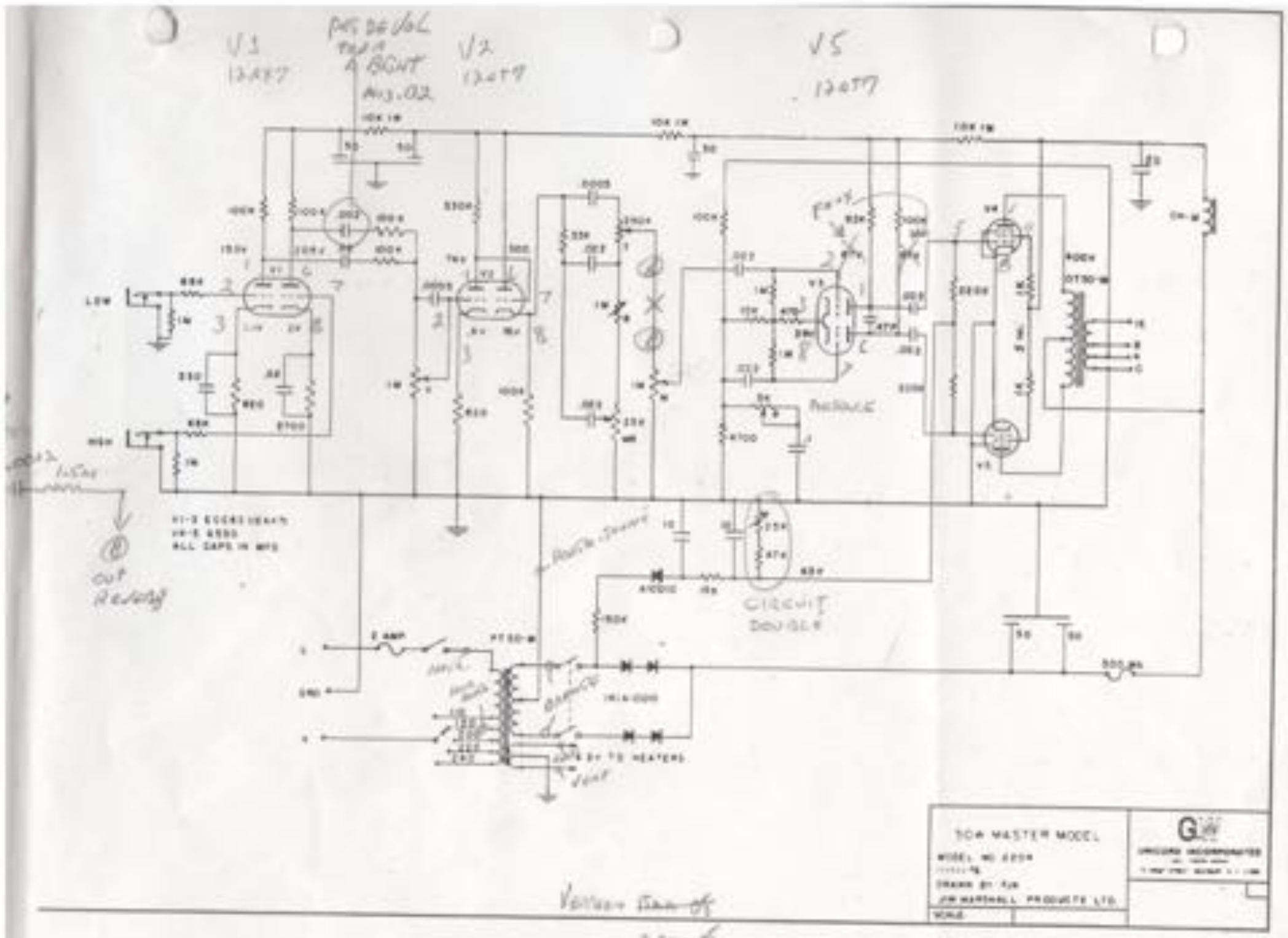
V1
12AX7
V2
12AT7
V5
12AT7
LOW
HIGH
CIRCUIT DOUBLE
OUT
HEATERS
50W MASTER MODEL
MARSHALL PRODUCTS LTD.