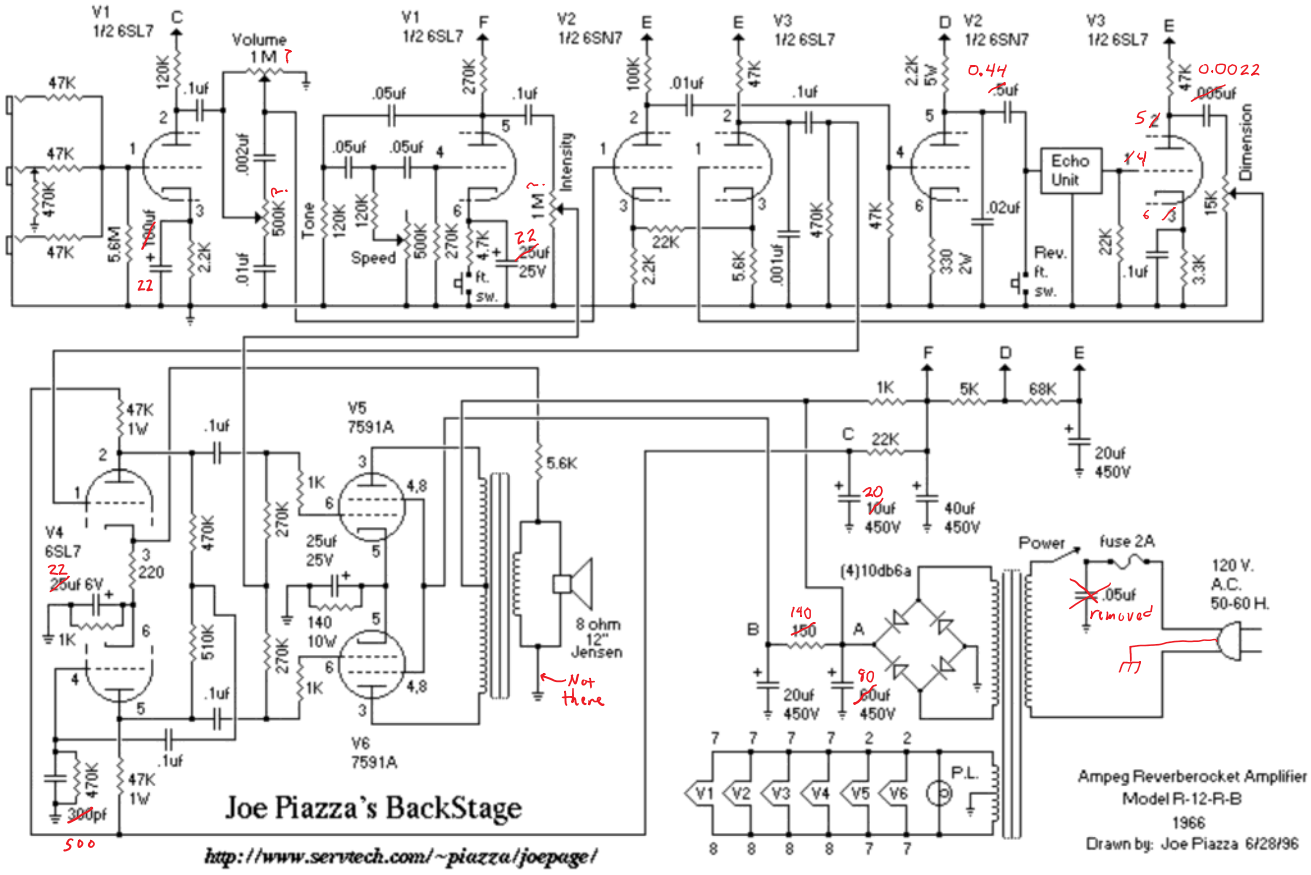Reverberocket Schematic