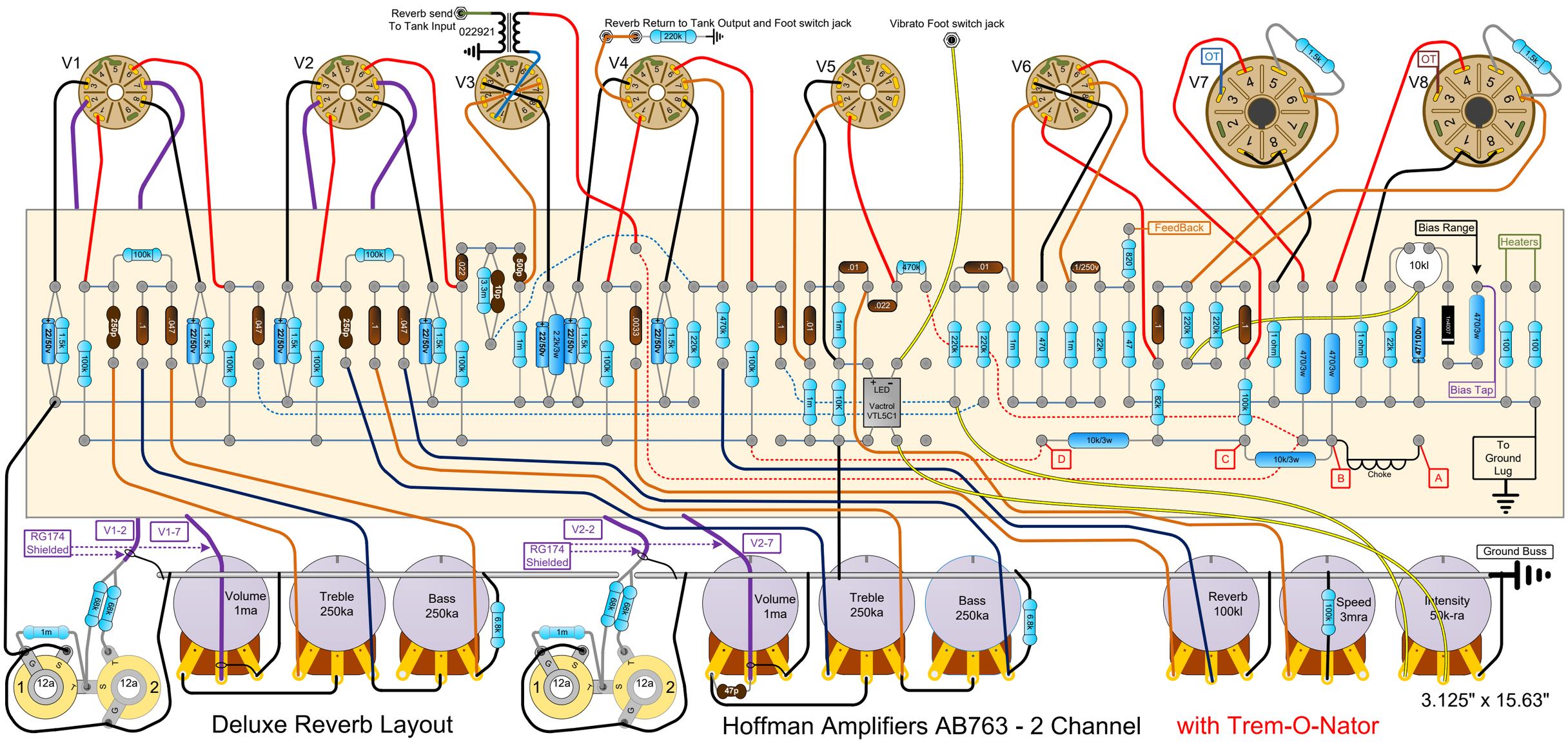
Reverb send
To Tank Input
022921
Reverb Return to Tank Output and Foot switch jack
Vibrato Foot switch jack
V1
V2
V3
V4
V5
V6
V7
V8
OT
FeedBack
Bias Range
Heaters
10kl
Bias Tap
LED
Vactrol
VTL5C1
10k/3w
Choke
To
Ground
Lug
RG174
Shielded
V1-2
V1-7
V2-2
V2-7
Volume
1ma
Treble
250ka
Bass
250ka
Reverb
100kl
Speed
3mra
Intensity
50k-ra
Ground Buss
3.125" x 15.63"
Deluxe Reverb Layout
Hoffman Amplifiers AB763 - 2 Channel
with Trem-O-Nator

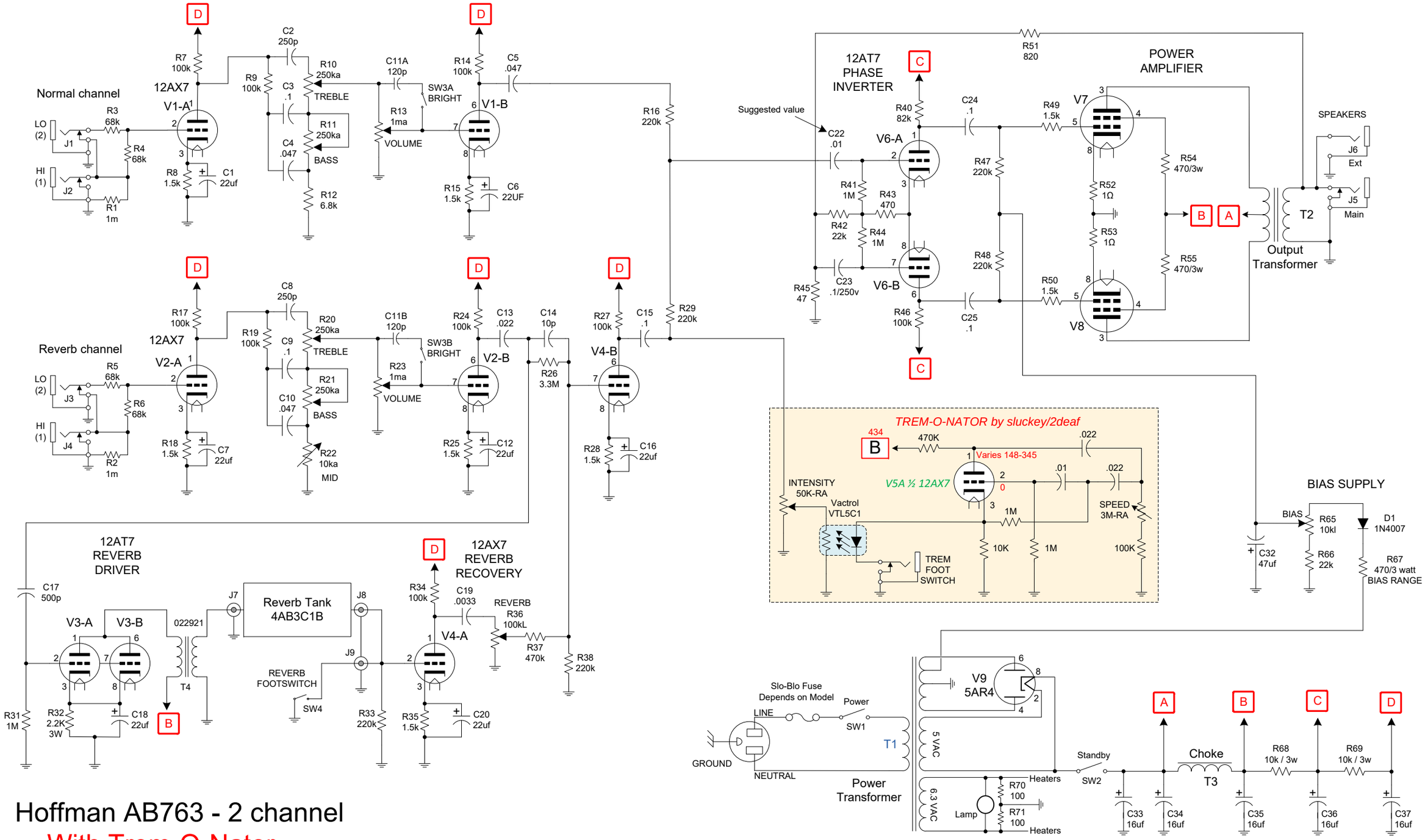

Hoffman AB763 - 2 channel

With Trem-O-Nator