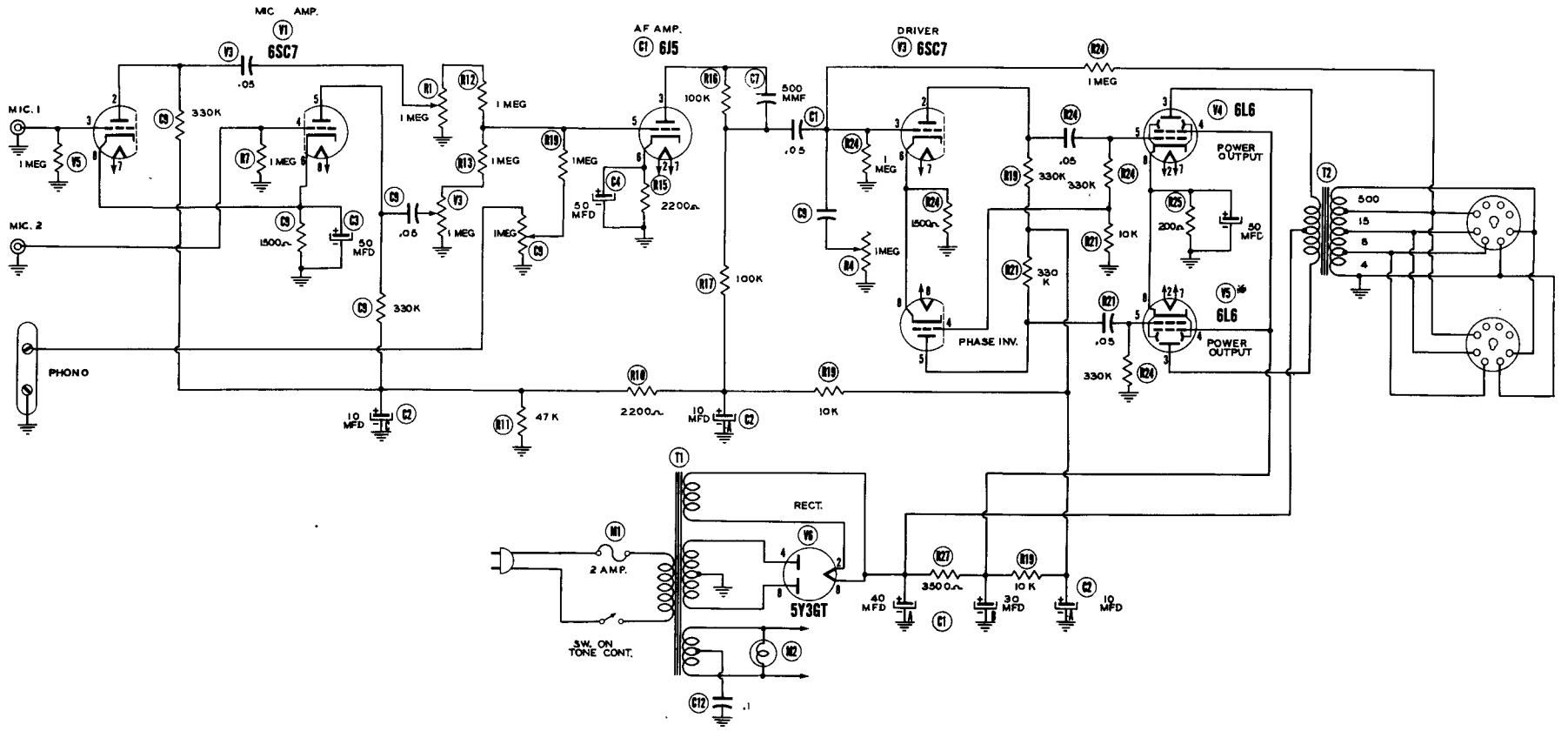

VOLTAGE READINGS

Item	Tube	Pin 1	Pin 2	Pin 3	Pin 4	Pin 5	Pin 6	Pin 7	Pin 8
V 1	6SC7	0V	60VDC	0V	0V	60VDC	.9VDC	¶	¶
V 2	6J5	0V	¶	35VDC	0V	0V	0V	¶	1.6VDC
V 3	6SC7	0V	90VDC	0V	0V	90VDC	1.2VDC	¶	¶
V 4	6L6G	0V	¶	320VDC	300VDC	0V	0V	¶	20VDC
V 5	6L6G	0V	¶	320VDC	390VDC	0V	0V	¶	20VDC
V 6	5Y3GT	0V	320VDC	0V	320VAC	0V	320VDC	0V	320VDC

¶ 6.3VAC MEASURED ACROSS FILAMENTS

RESISTANCE READINGS

Item	Tube	Pin 1	Pin 2	Pin 3	Pin 4	Pin 5	Pin 6	Pin 7	Pin 8
V 1	6SC7	0Ω	†345KΩ	1Meg	1Meg	†345KΩ	1.5KΩ	Inf.	Inf.
V 2	6J5	0Ω	Inf.	†210KΩ	Inf.	500KΩ	Inf.	Inf.	2.2KΩ
V 3	6SC7	0Ω	†340KΩ	500KΩ	10KΩ	†340KΩ	1.5KΩ	Inf.	Inf.
V 4	6L6G	0Ω	Inf.	†145Ω	†3.5KΩ	340KΩ	Inf.	Inf.	200Ω
V 5	6L6G	0Ω	Inf.	†145Ω	†3.5KΩ	330KΩ	Inf.	Inf.	200Ω
V 6	5Y3GT	Inf.	30KΩ	Inf.	85Ω	Inf.	85Ω	Inf.	30KΩ

† MEASURED FROM PIN 8 OF V6

THE COOPERATION OF THE MANUFACTURER OF THIS EQUIPMENT MAKES IT POSSIBLE TO BRING YOU THIS SERVICE

A PHOTOFACT STANDARD NOTATION SCHEMATIC

©Howard W. Sams & Co., Inc. 1951

1 - DC Voltage measurements are at 20,000 ohms per volt; AC Voltages measured at 1000 ohms per volt.
2 - Socket connections are shown as bottom views.
3 - Measured values are from socket pin to common negative.
4 - Line voltage maintained at 117 volts for voltage readings.
5 - Nominal tolerance on component values makes possible a variation of ± 15% in voltage and resistance readings..
6 - All controls at minimum, proper output load converted.