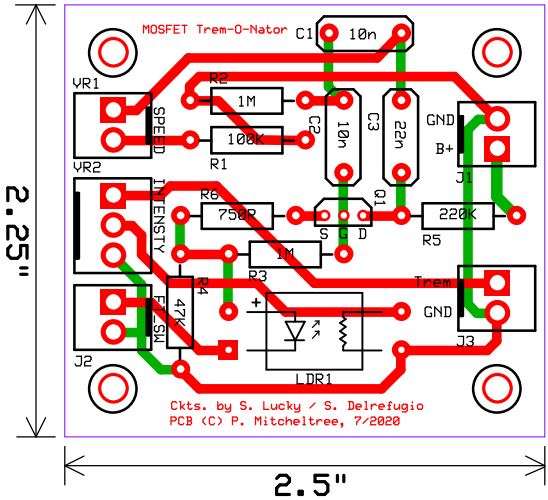
MOSFET Trem-O-Nator
C1
10n
VR1
R2
1M
SPEED
100K
R1
C2
10n
C3
22n
GND
B+
J1
VR2
INTENSTY
R6
750R
Q1
S
G
D
220K
R5
1M
R3
Z4
47K
FREQ SW
Trem
GND
J3
J2
LDR1
Ckts. by S. Lucky / S. Delrefugio
PCB (C) P. Mitcheltree, 7/2020
2.25"
2.5"