Fender Bassman AA864 (1964-65) with some elements of AB165 (1965) and 1964 "Tuxedo" circuits

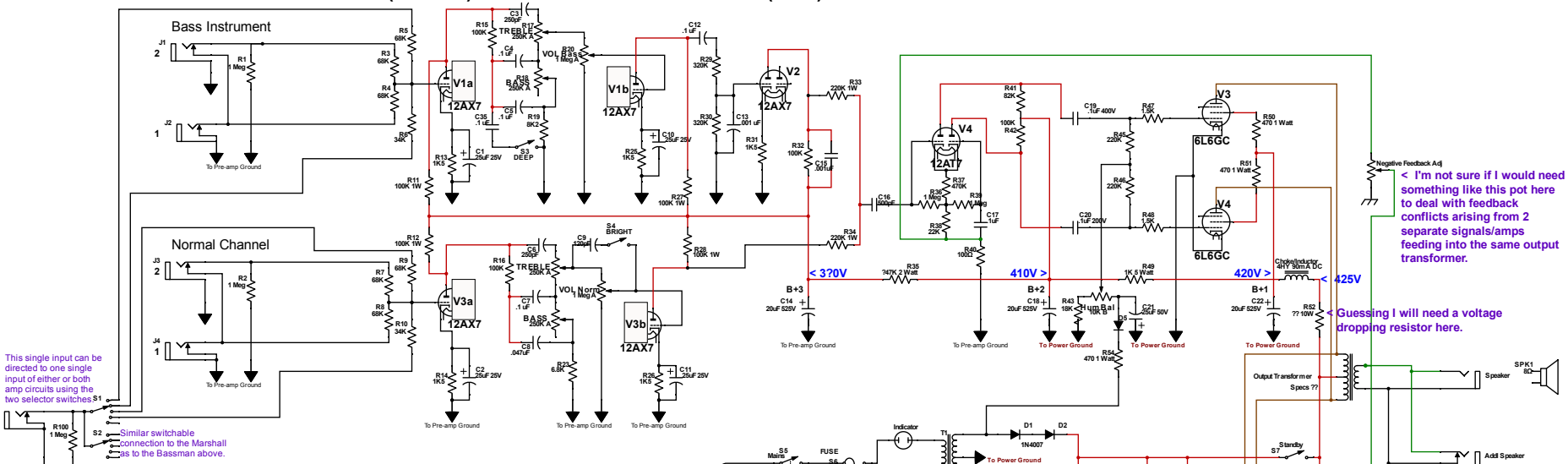
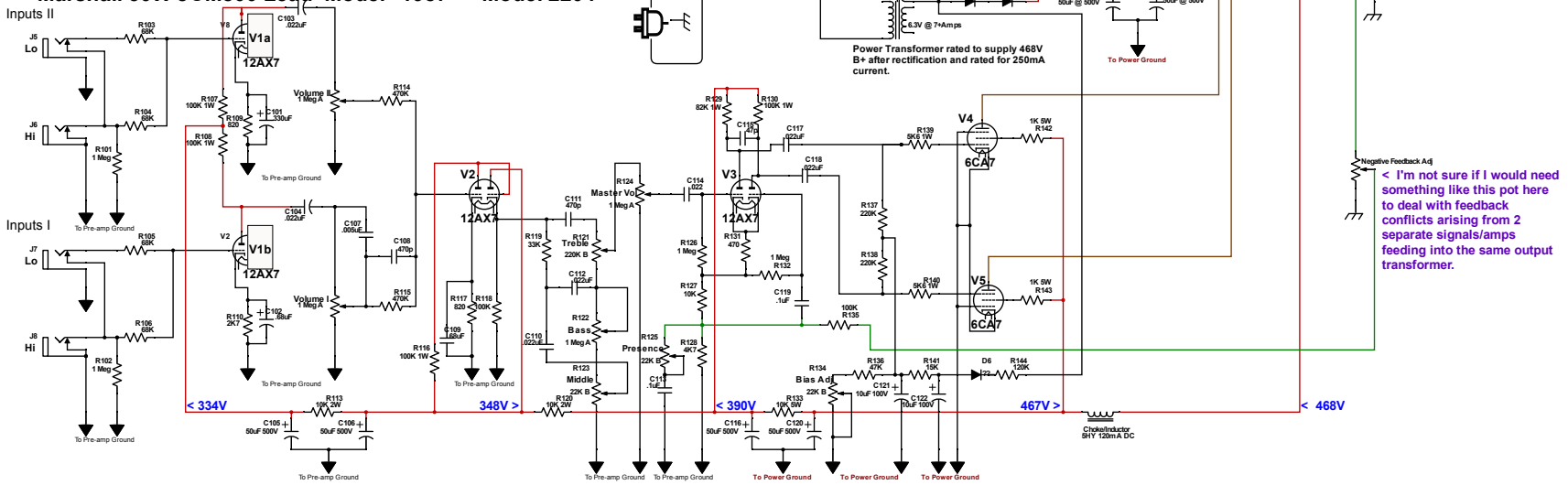
Marshall 50W JCM800 Lead Model "1987" + Model 2204