The "Best of Bassman"
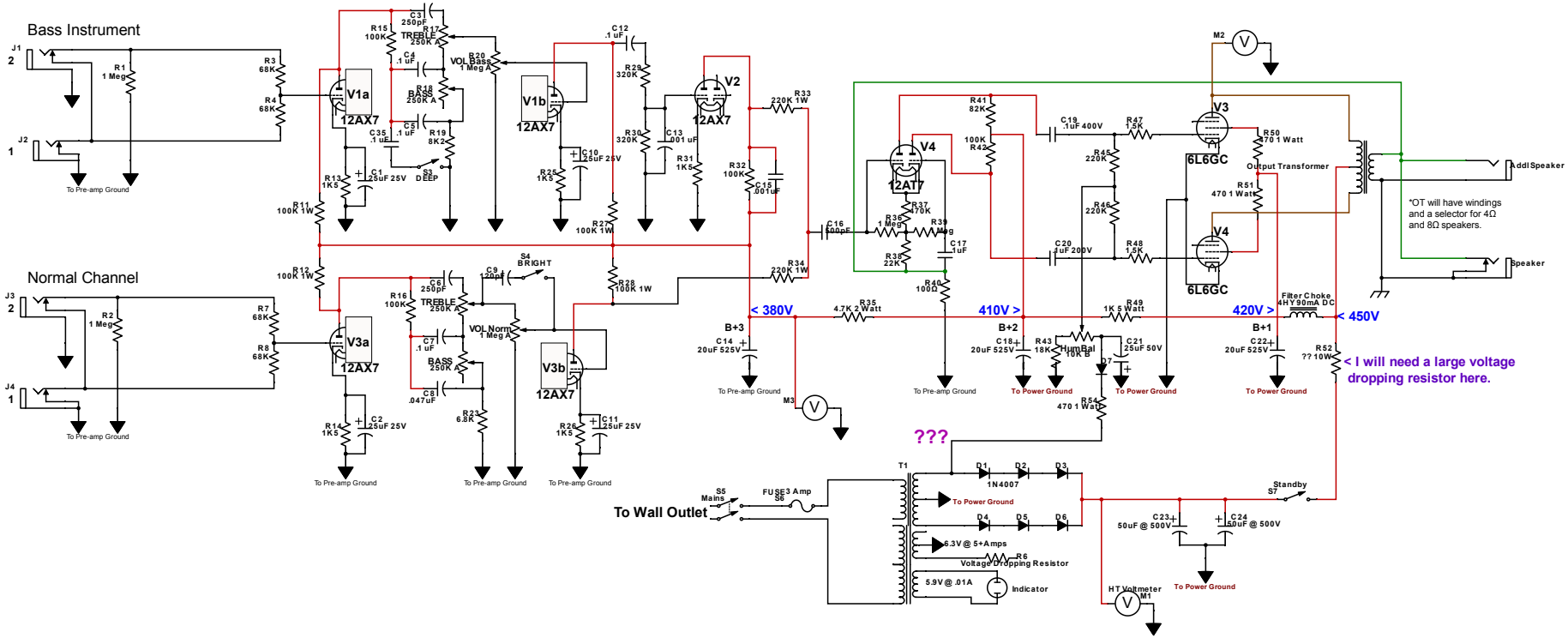
Fender Bassman AA864 (1964-65) with some elements of AB165 (1965) and 1964 "Tuxedo" circuits