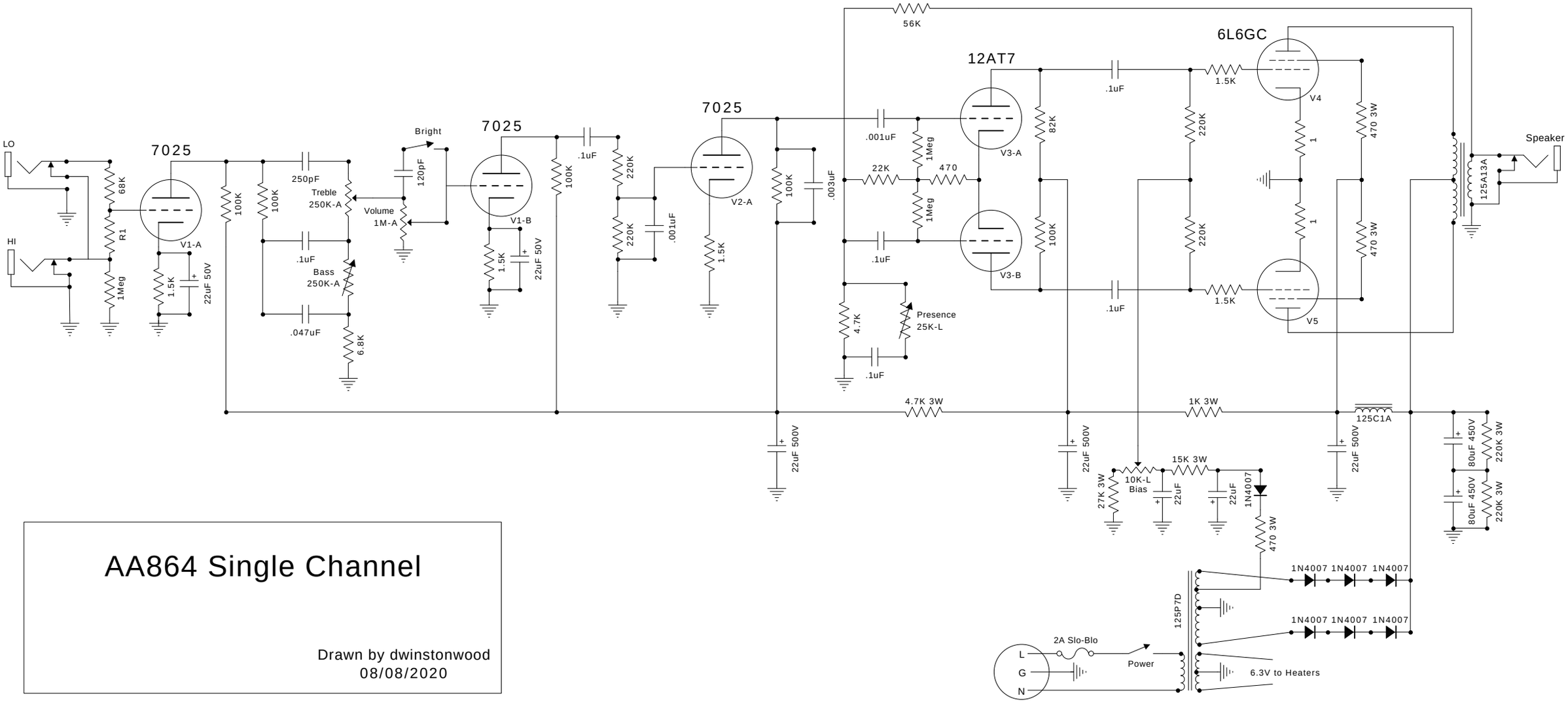

AA864 Single Channel

Drawn by dwinstonwood
08/08/2020