The "Best of Bassman"
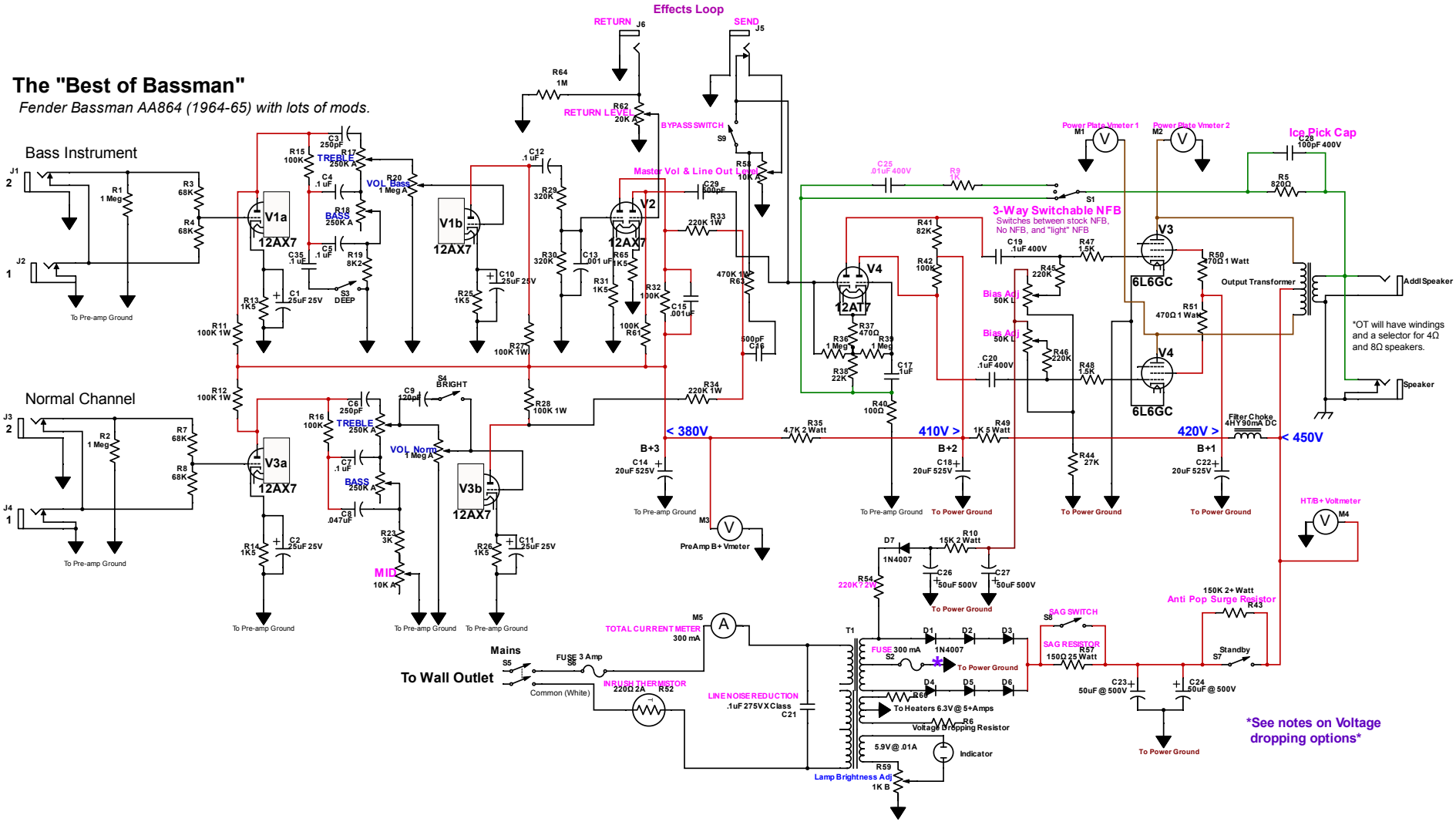
Fender Bassman AA864 (1964-65) with lots of mods.