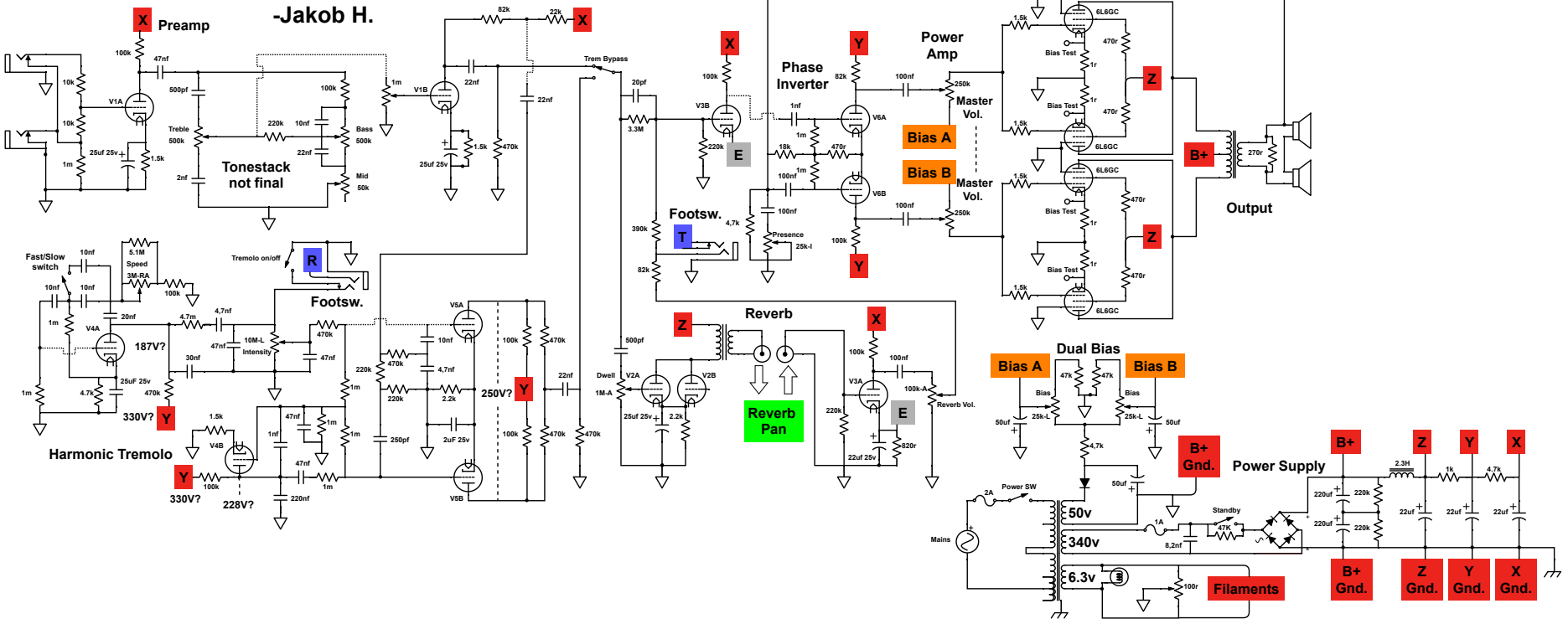Harmonic Twin - Work in progress
V.0.8 - 03.09.20
-Jakob H.