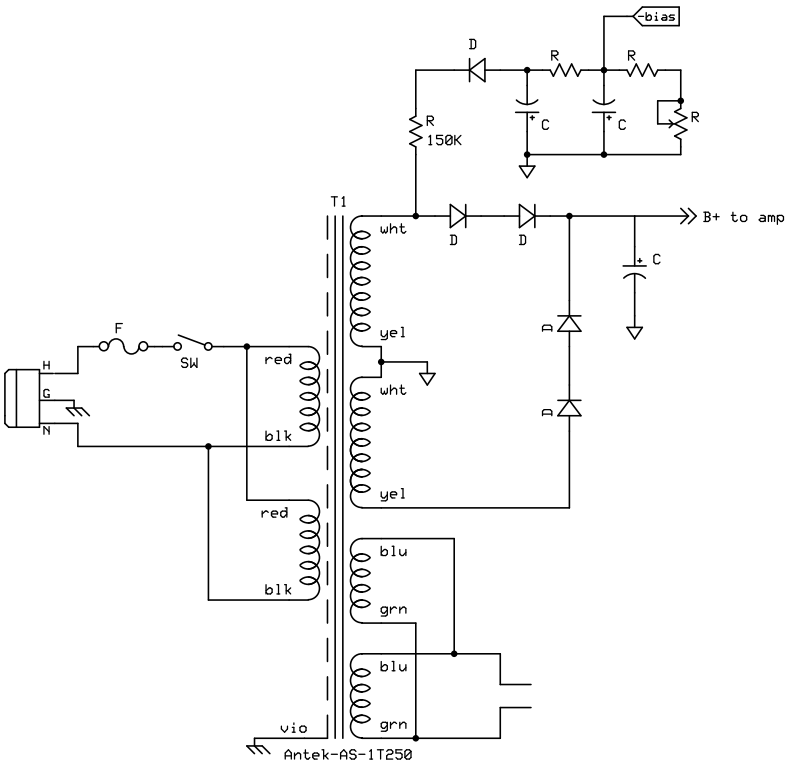


| Forum Amps | | |
|---|---|---|
| Antek AS-1T250 FW PS + Bias | | |
| Pete | Rev 1.0<br>9/10/2020 | Page 1 |