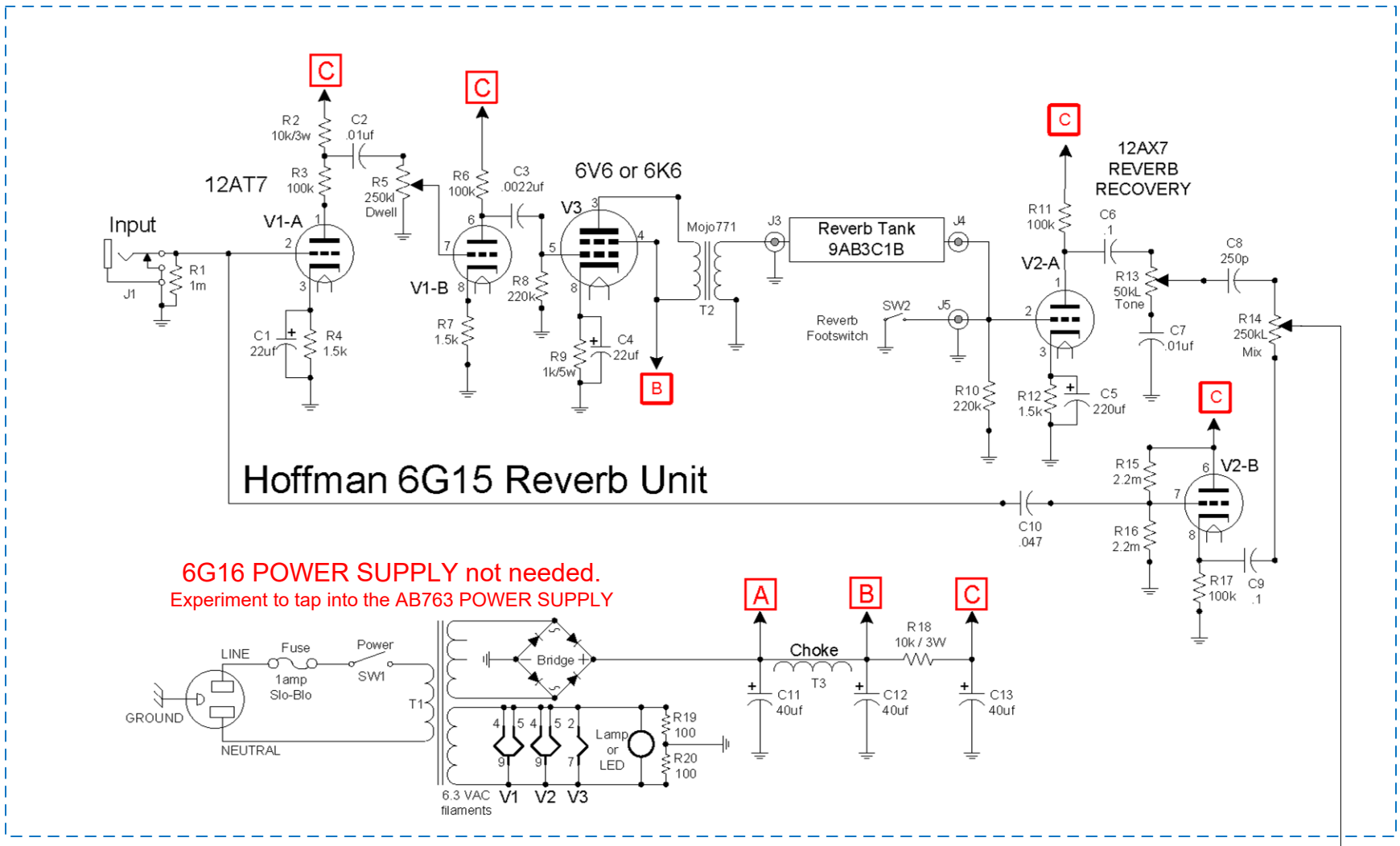
Hoffman 6G15 Reverb Unit
12AT7
V1-A
V1-B
Input
J1
R1 1m
R2 10k/3w
R3 100k
C2 .01uf
R5 250kl Dwell
C1 22uf
R4 1.5k
R6 100k
C3 .0022uf
R7 1.5k
R8 220k
6V6 or 6K6
V3
R9 1k/5w
C4 22uf
Mojo771
T2
J3
Reverb Tank 9AB3C1B
J4
Reverb Footswitch
SW2
J5
12AX7 REVERB RECOVERY
V2-A
R11 100k
C6 .1
R13 50kL Tone
C7 .01uf
C8 250p
R14 250kL Mix
R10 220k
R12 1.5k
C5 220uf
V2-B
R15 2.2m
R16 2.2m
R17 100k
C9 .1
C10 .047
6G16 POWER SUPPLY not needed.
Experiment to tap into the AB763 POWER SUPPLY
LINE
Fuse
1amp Slo-Blo
Power
SW1
GROUND
NEUTRAL
T1
Bridge
6.3 VAC filaments
V1 V2 V3
Lamp or LED
R19 100
R20 100
Choke
T3
C11 40uf
C12 40uf
C13 40uf
R18 10k / 3W

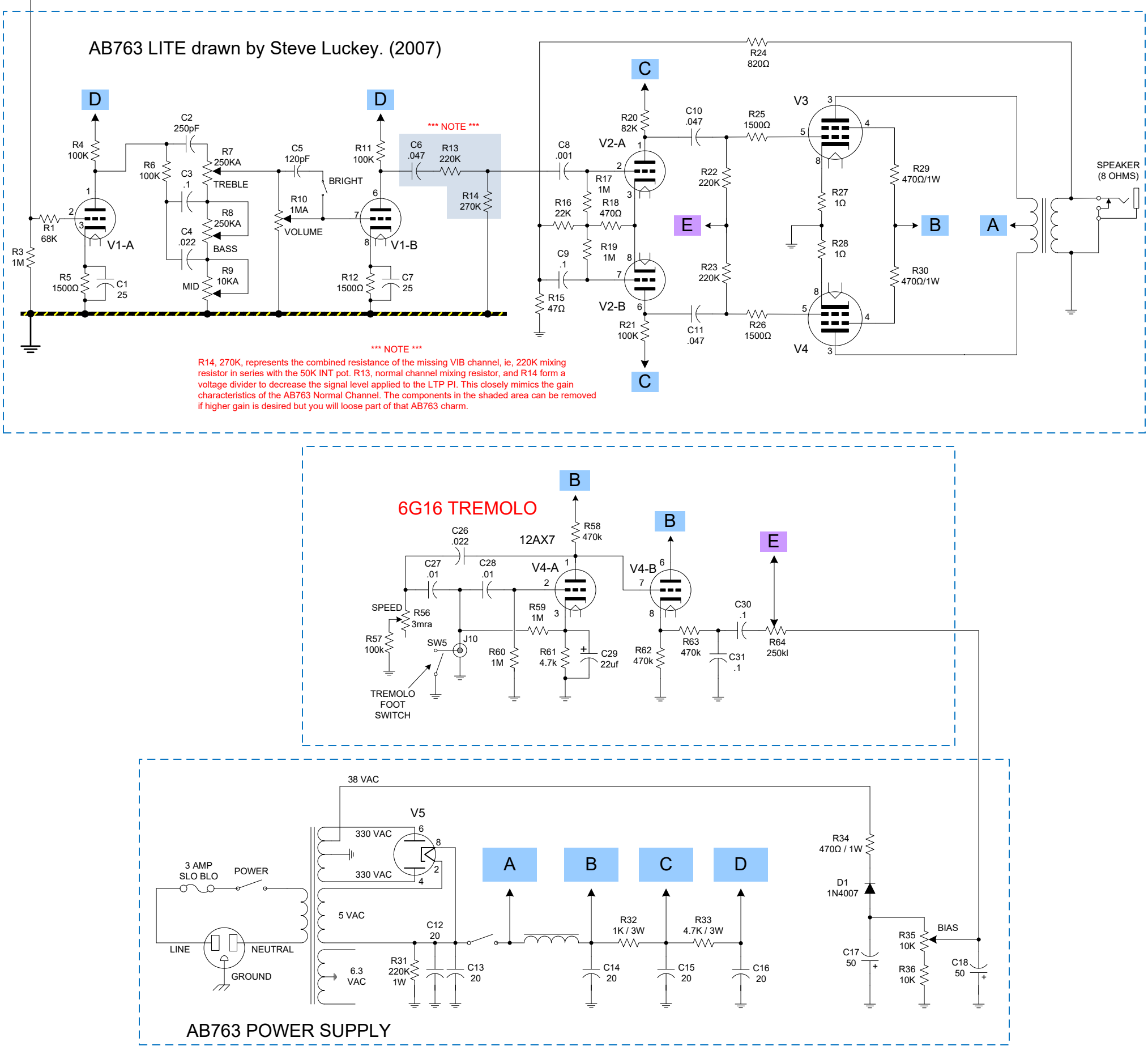
AB763 LITE drawn by Steve Luckey. (2007)
V1-A
V1-B
R1 68K
R3 1M
R4 100K
R5 1500Ω
C1 25
R6 100K
C2 250pF
C3 .1
C4 .022
R7 250KA TREBLE
R8 250KA BASS
R9 10KA MID
C5 120pF
R10 1MA VOLUME
BRIGHT
R11 100K
R12 1500Ω
C7 25
*** NOTE ***
C6 .047
R13 220K
R14 270K
C8 .001
C9 .1
R15 47Ω
R16 22K
R17 1M
R18 470Ω
R19 1M
V2-A
V2-B
R20 82K
R21 100K
C10 .047
C11 .047
R22 220K
R23 220K
R24 820Ω
R25 1500Ω
R26 1500Ω
V3
V4
R27 1Ω
R28 1Ω
R29 470Ω/1W
R30 470Ω/1W
SPEAKER (8 OHMS)
*** NOTE ***
R14, 270K, represents the combined resistance of the missing VIB channel, ie, 220K mixing resistor in series with the 50K INT pot. R13, normal channel mixing resistor, and R14 form a voltage divider to decrease the signal level applied to the LTP PI. This closely mimics the gain characteristics of the AB763 Normal Channel. The components in the shaded area can be removed if higher gain is desired but you will loose part of that AB763 charm.

6G16 TREMOLO
12AX7
V4-A
V4-B
R58 470k
C26 .022
C27 .01
C28 .01
SPEED
R56 3mra
R57 100k
SW5
J10
TREMOLO FOOT SWITCH
R59 1M
R60 1M
R61 4.7k
C29 22uf
R62 470k
R63 470k
C30 .1
C31 .1
R64 250kl

AB763 POWER SUPPLY
38 VAC
V5
330 VAC
330 VAC
3 AMP SLO BLO
POWER
LINE
NEUTRAL
GROUND
5 VAC
6.3 VAC
C12 20
R31 220K 1W
C13 20
C14 20
C15 20
C16 20
R32 1K / 3W
R33 4.7K / 3W
R34 470Ω / 1W
D1 1N4007
C17 50
R35 10K
R36 10K
BIAS
C18 50