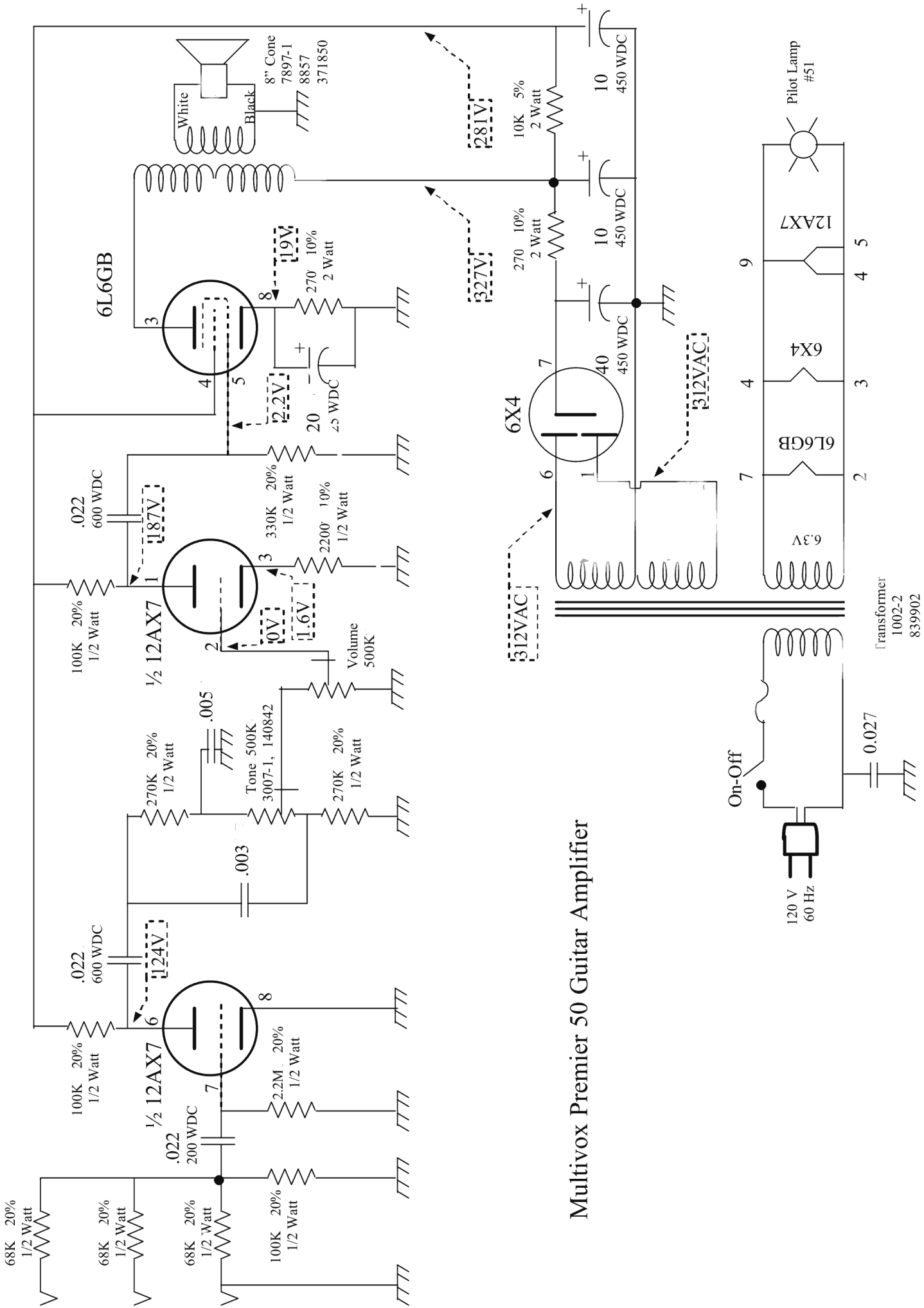

www.radiomuseum.org; upload by Hannes Gerber; download by Peter Philbrook Wed Sep 02 02:25:08 CEST 2020 [2102 x 2978, 109kb, 300 DPI]