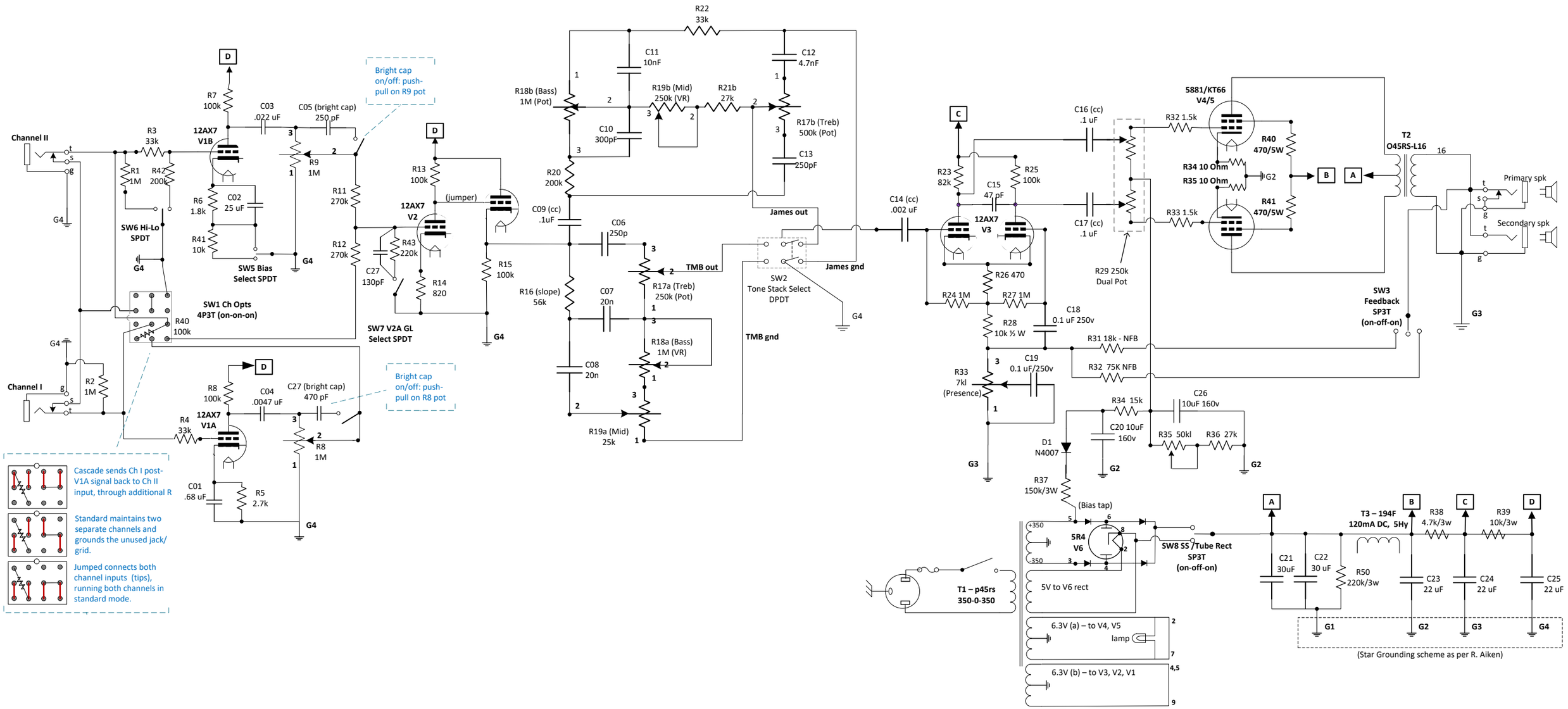Schematic and notes for 5F6A-based 2 channel amp