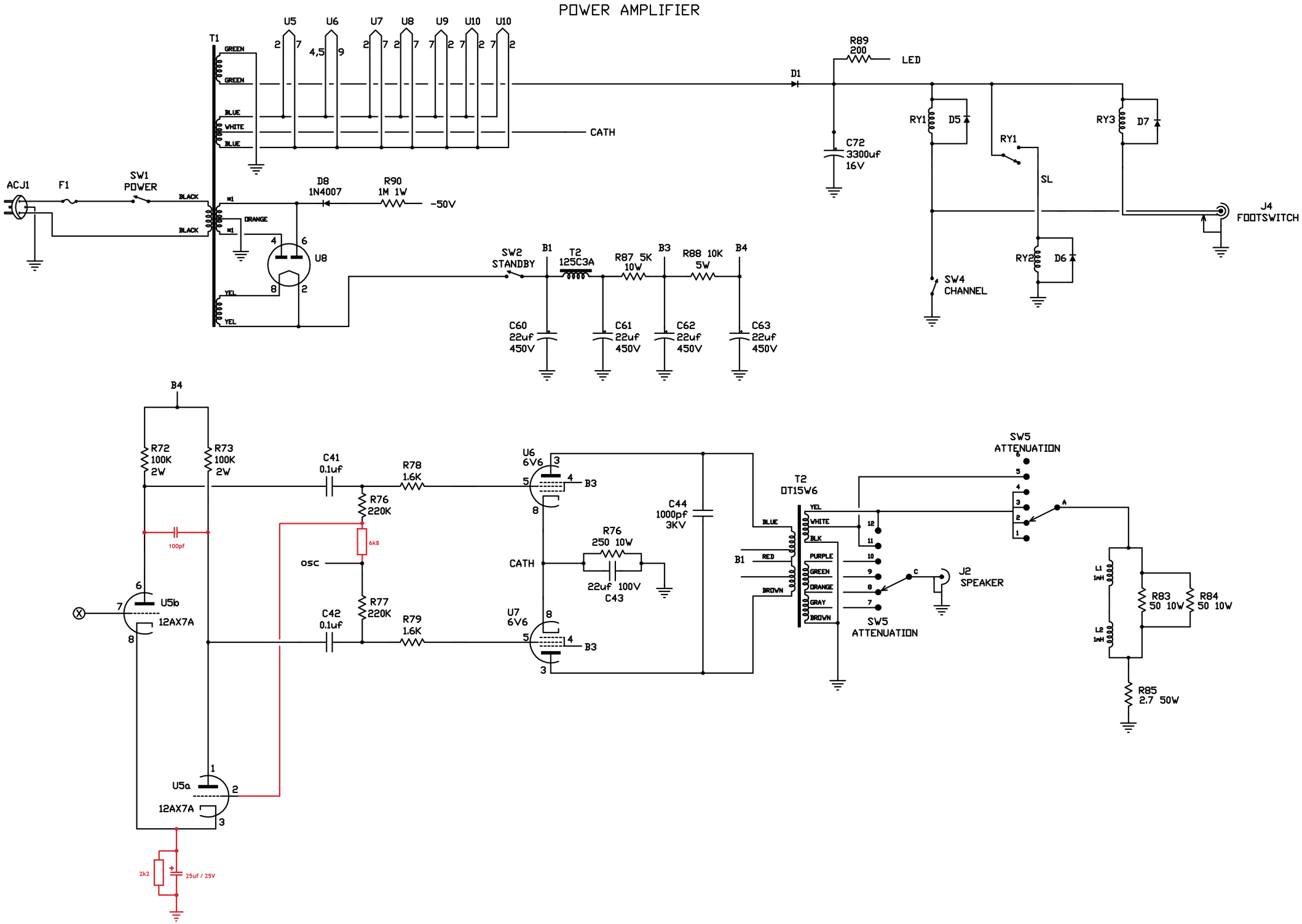Model No. E66 Earth Imperial Rev B