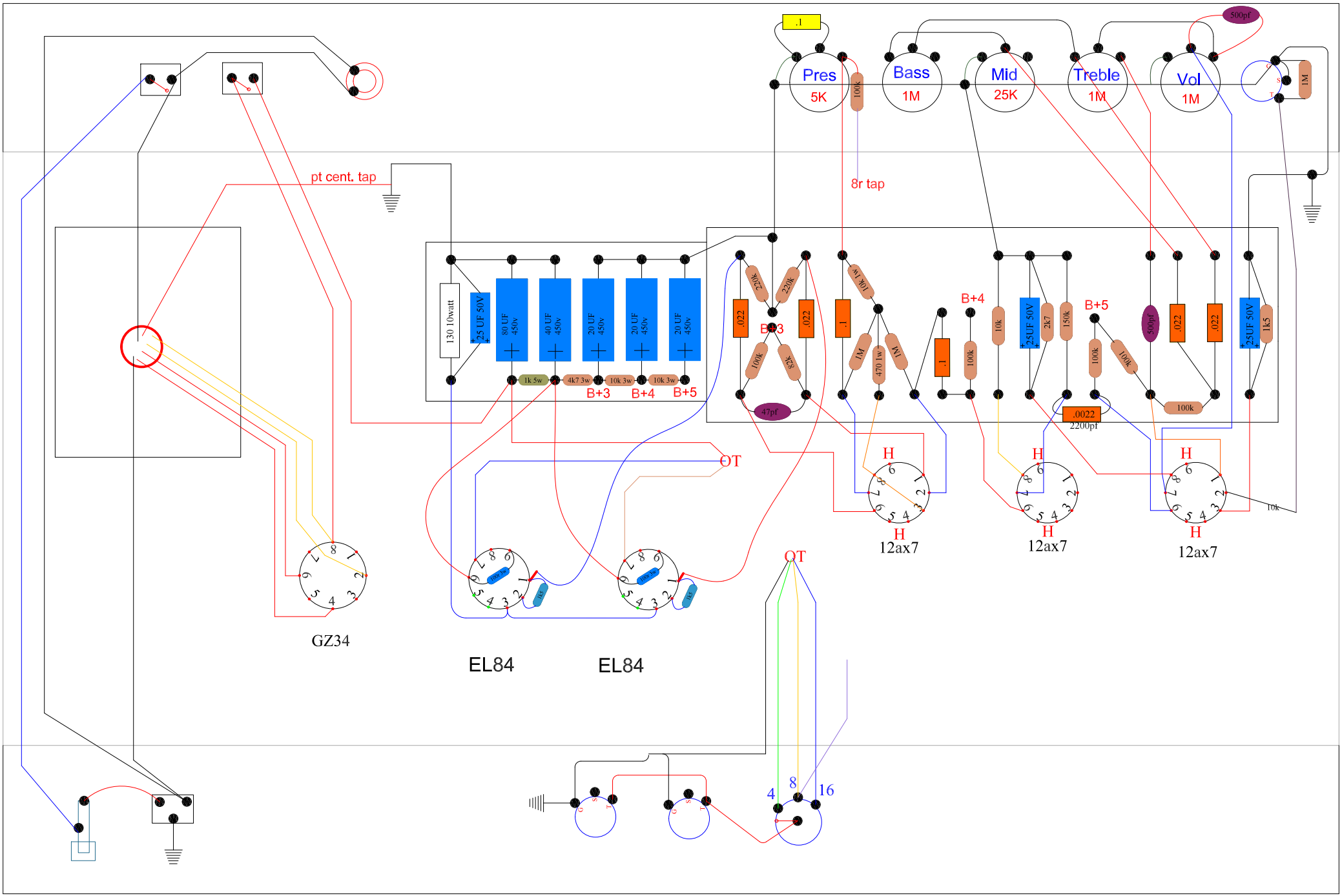
.1
Pres
5K
100k
Bass
1M
Mid
25K
Treble
1M
Vol
1M
500pf
1M
pt cent. tap
8r tap
130 10watt
25 UF 50V
80 UF 450v
40 UF 450v
20 UF 450v
20 UF 450v
20 UF 450v
1k 5w
4k7 3w
10k 3w
10k 3w
B+3
B+4
B+5
.022
220k
220k
B+3
.022
100k
82k
47pf
.1
10k 1w
1M
470 1w
1M
.1
100k
B+4
10k
25UF 50V
2k7
150k
B+5
100k
100k
.0022
2200pf
500pf
.022
.022
100k
25UF 50V
1k5
OT
H
H
12ax7
H
H
12ax7
H
H
12ax7
10k
GZ34
EL84
EL84
OT
4
8
16