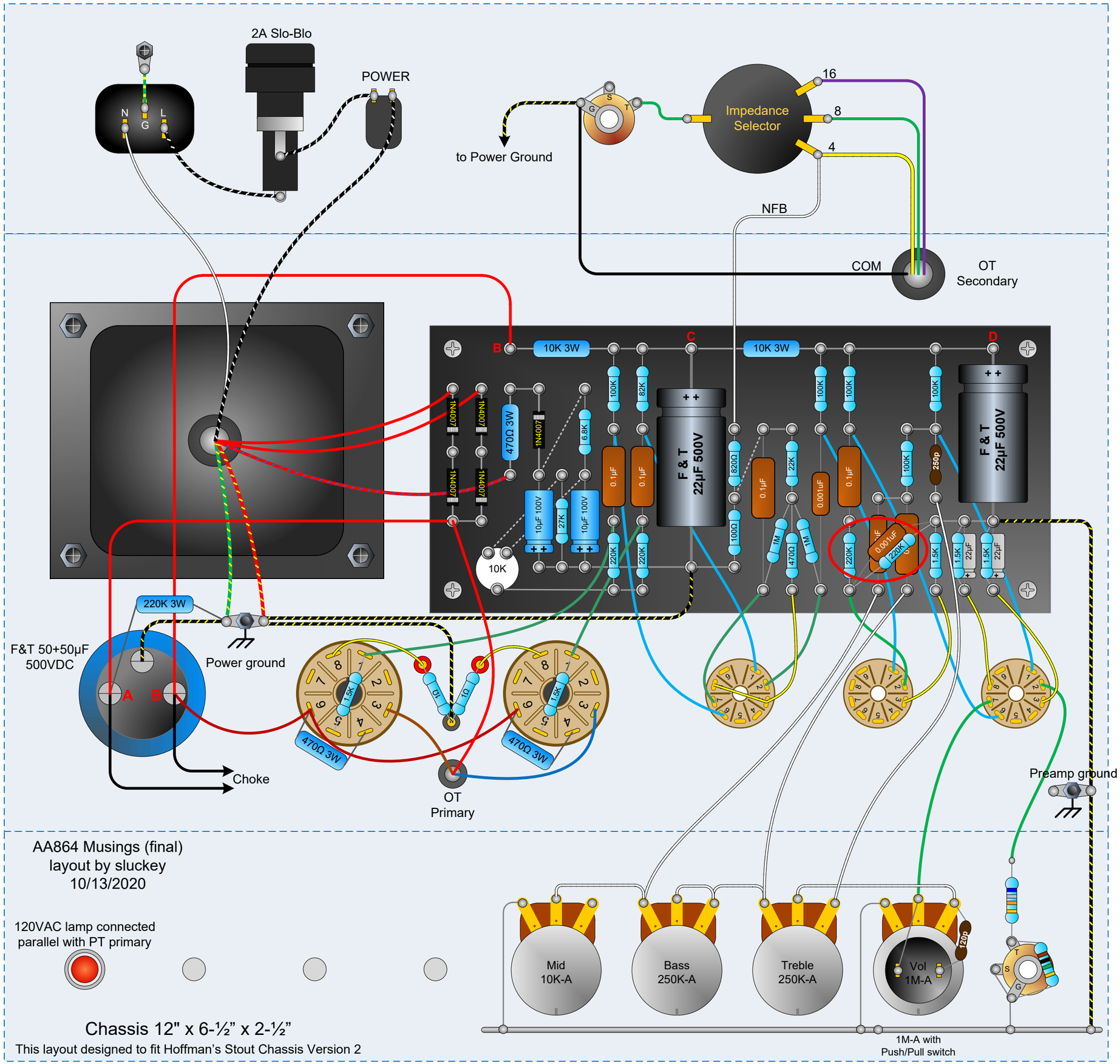

AA864 Musings (final)
layout by sluckey
10/13/2020

120VAC lamp connected parallel with PT primary

Chassis 12" x 6-½" x 2-½"

This layout designed to fit Hoffman's Stout Chassis Version 2