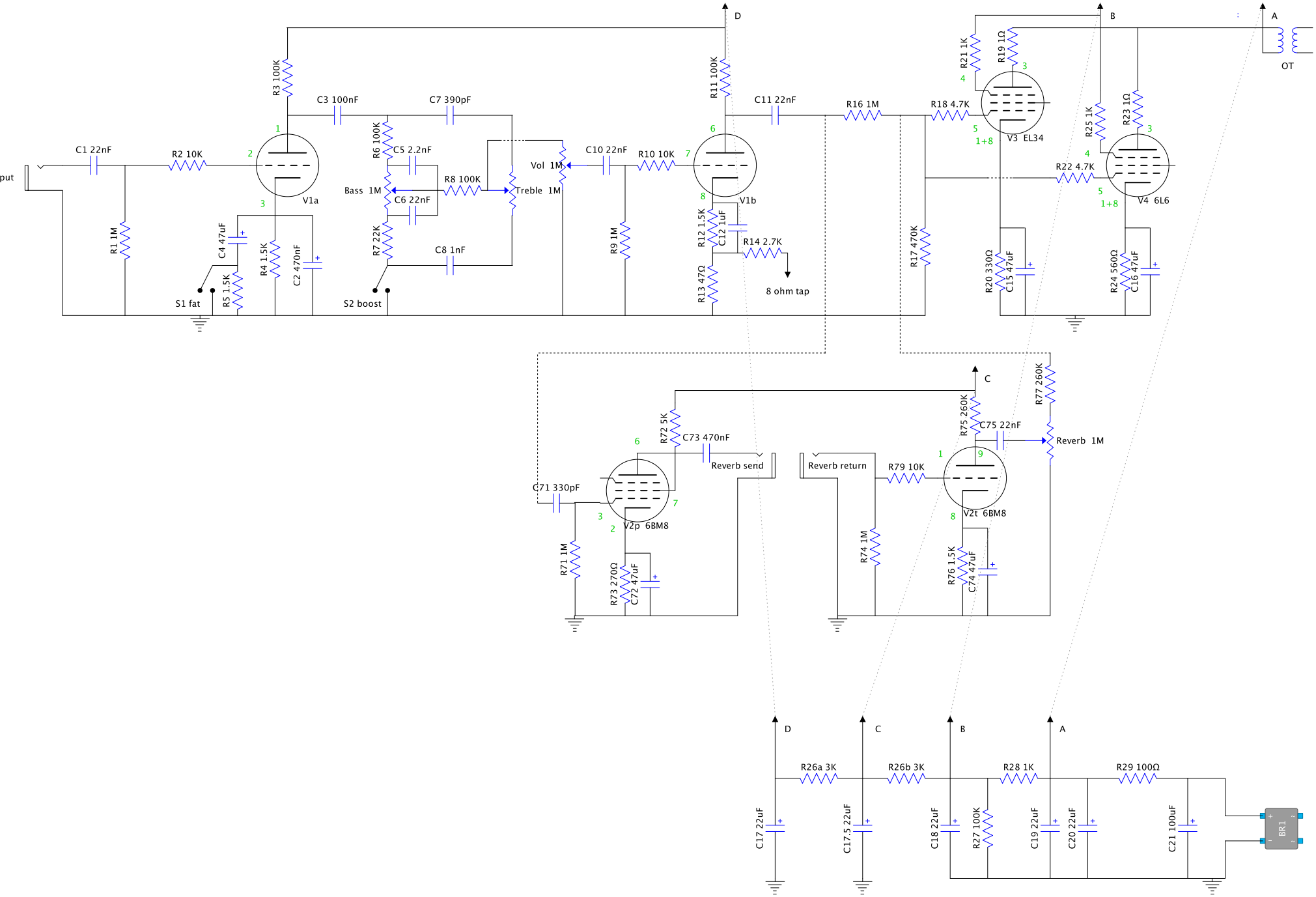
D
B
A
OT
R3 100K
C3 100nF
C7 390pF
R11 100K
C11 22nF
R16 1M
R18 4.7K
R21 1K
R19 1Ω
V3 EL34
R25 1K
R23 1Ω
C1 22nF
R2 10K
R6 100K
C5 2.2nF
Vol 1M
C10 22nF
R10 10K
R22 4.7K
V4 6L6
V1a
Bass 1M
R8 100K
Treble 1M
C6 22nF
V1b
R12 1.5K
C12 1uF
R14 2.7K
8 ohm tap
R1 1M
C4 47uF
R4 1.5K
C2 470nF
R7 22K
C8 1nF
R9 1M
R13 47Ω
R17 470K
R20 330Ω
C15 47uF
R24 560Ω
C16 47uF
S1 fat
R5 1.5K
S2 boost
C
R77 260K
R72 5K
C73 470nF
R75 260K
C75 22nF
Reverb 1M
Reverb send
Reverb return
R79 10K
C71 330pF
V2p 6BM8
V2t 6BM8
R71 1M
R73 270Ω
C72 47uF
R74 1M
R76 1.5K
C74 47uF
R26a 3K
R26b 3K
R28 1K
R29 100Ω
C17 22uF
C17.5 22uF
C18 22uF
R27 100K
C19 22uF
C20 22uF
C21 100uF
BR1