Model no. 202 '20th Imperial' HW rev B
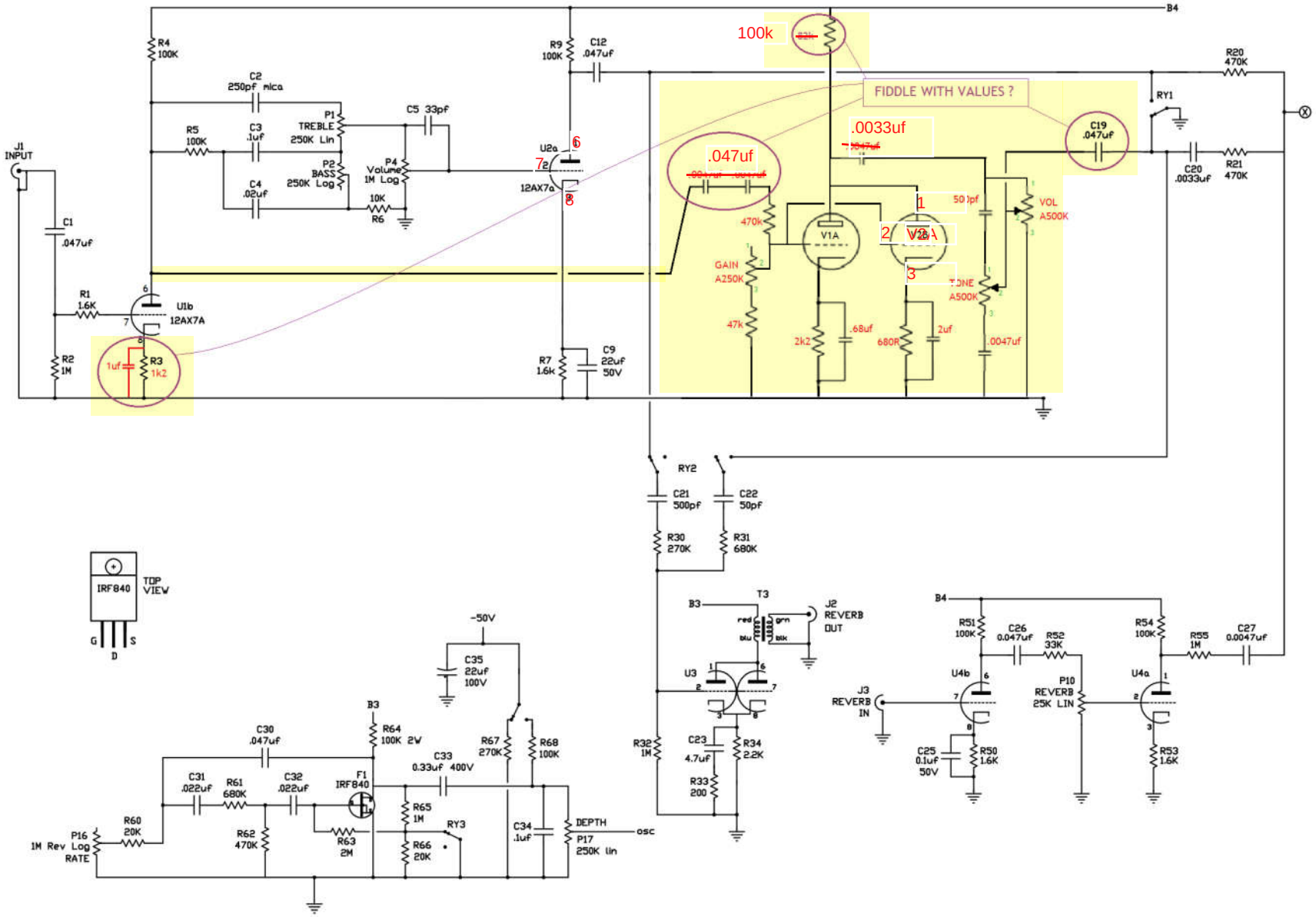
PREAMPLIFIER