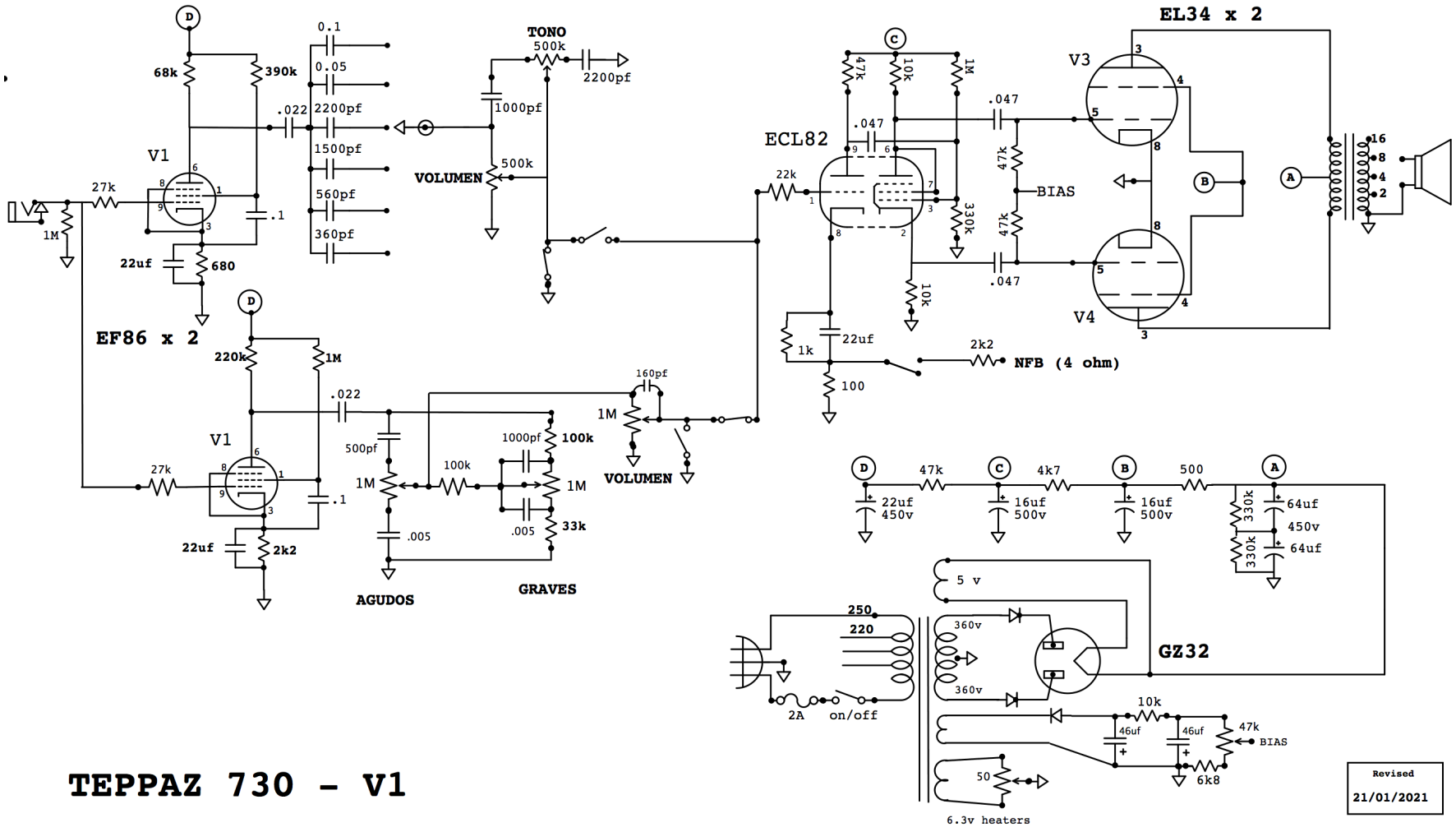

TEPPAZ 730 - V1

Revised
21/01/2021