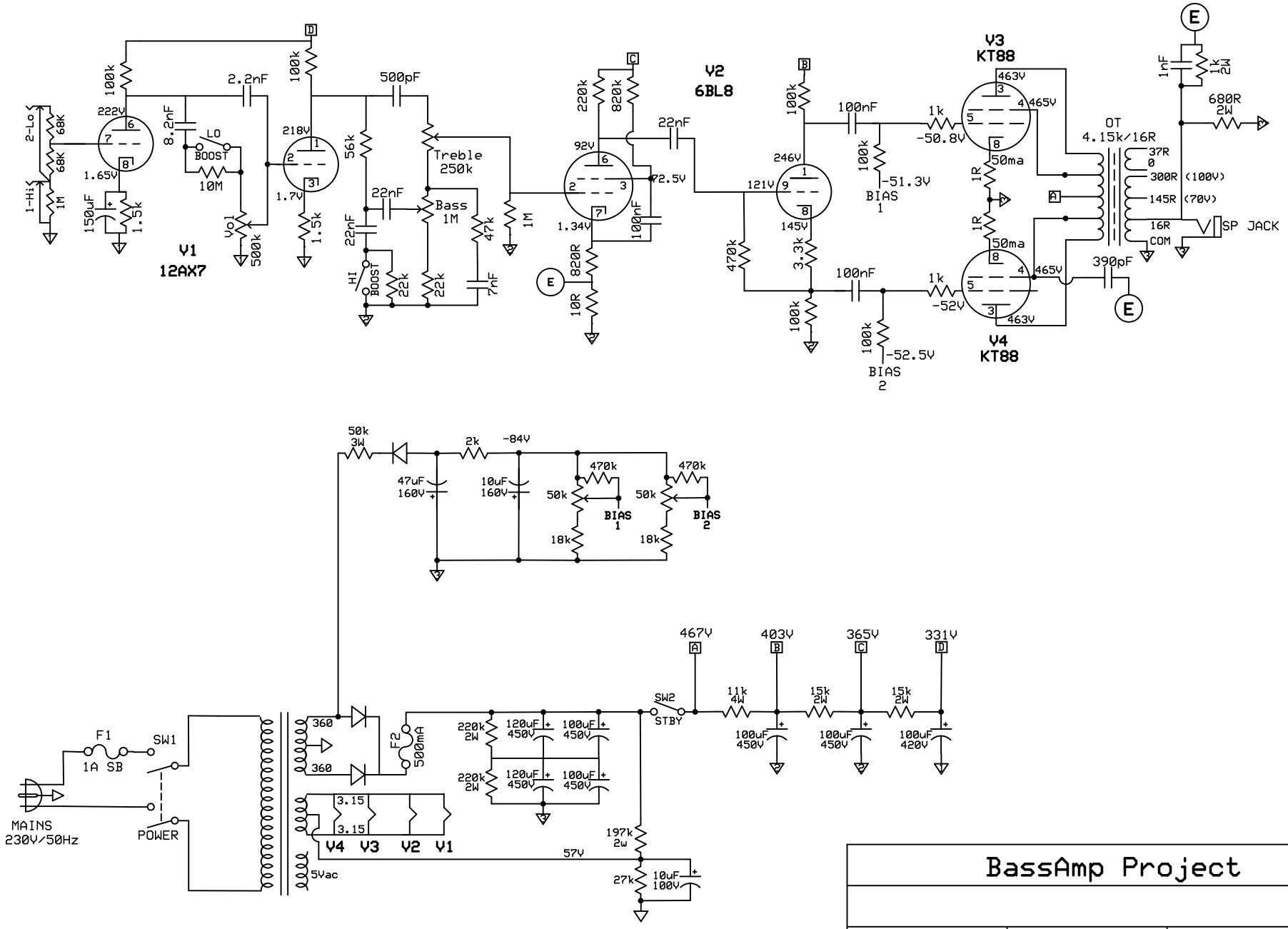

BassAmp Project		
Designer's name	Rev: As built FEB 2021.	Page # 1