Model no. 200 '20th Imperial' rev B

POWER AMPLIFIER

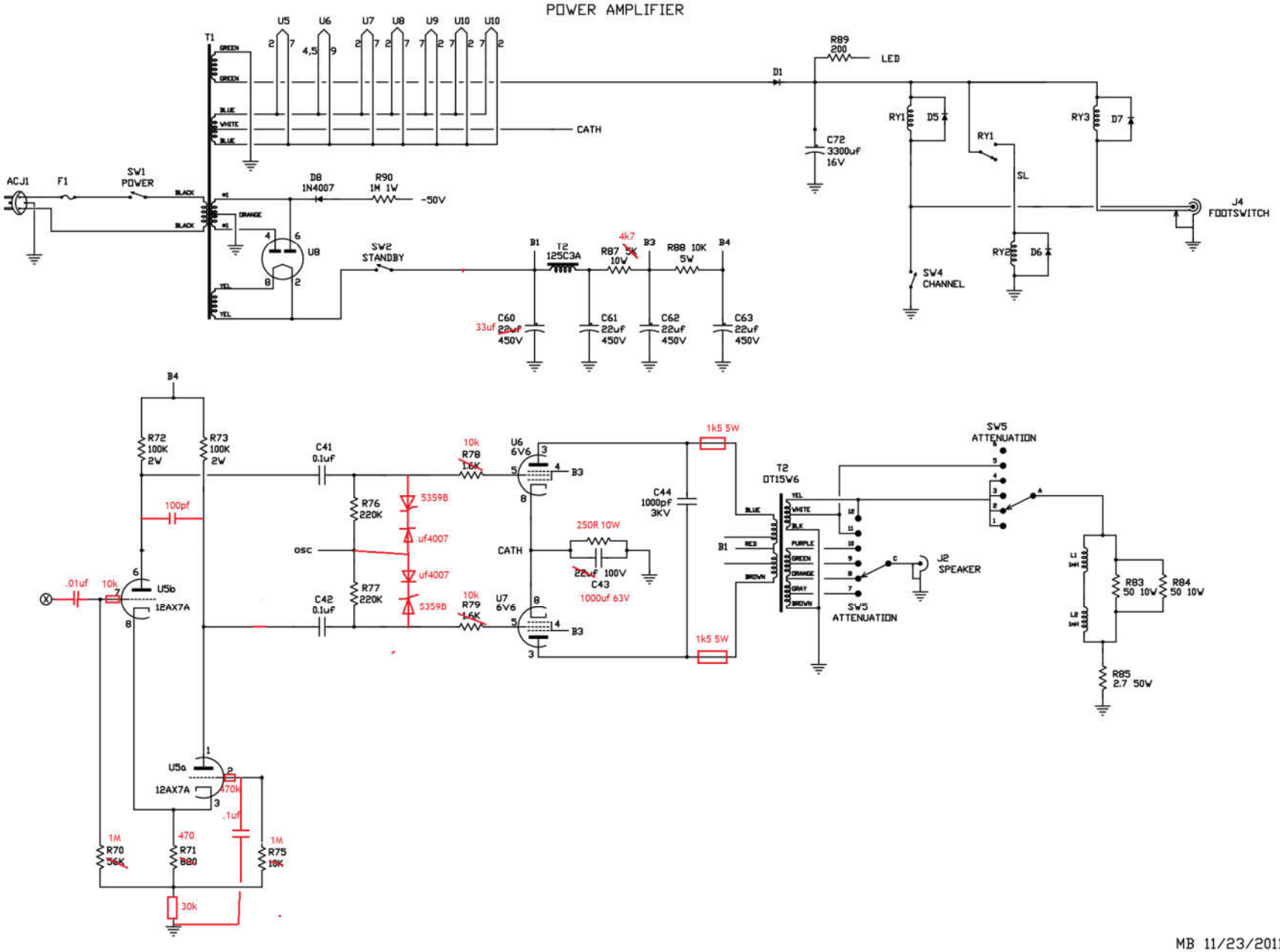

MB 11/23/2011