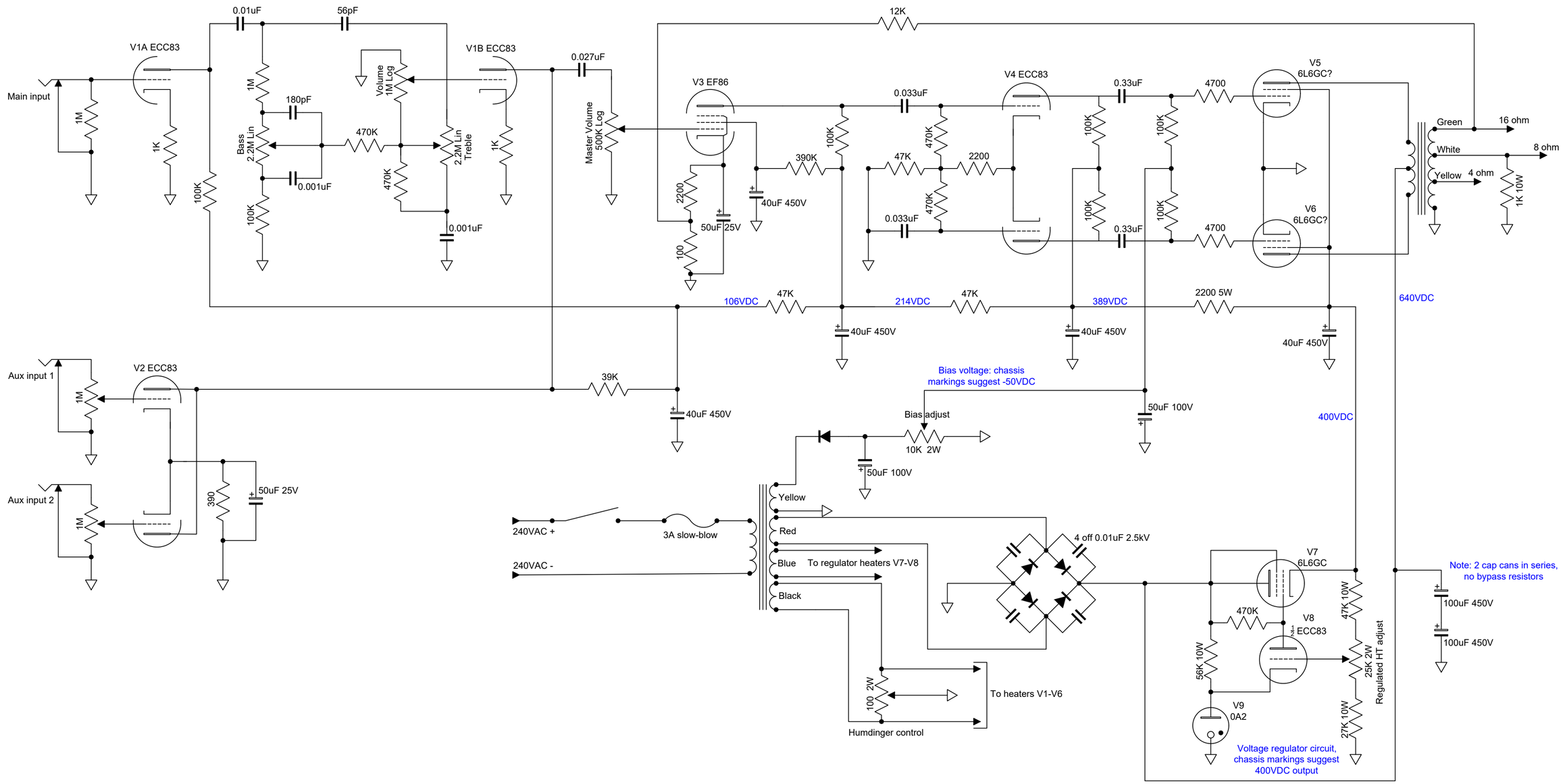
Main input
1M
1K
V1A ECC83
100K
0.01uF
56pF
1M
180pF
Bass
2.2M Lin
0.001uF
100K
470K
Volume
1M Log
470K
0.001uF
2.2M Lin
Treble
V1B ECC83
1K
0.027uF
Master Volume
500K Log
12K
V3 EF86
2200
100
50uF 25V
40uF 450V
390K
100K
0.033uF
47K
470K
2200
470K
0.033uF
V4 ECC83
0.33uF
100K
100K
0.33uF
4700
100K
100K
4700
V5
6L6GC?
V6
6L6GC?
Green
White
Yellow
16 ohm
8 ohm
4 ohm
1K 10W
106VDC
47K
214VDC
47K
389VDC
2200 5W
640VDC
40uF 450V
40uF 450V
40uF 450V
Aux input 1
1M
V2 ECC83
39K
40uF 450V
Bias voltage: chassis
markings suggest -50VDC
Bias adjust
10K 2W
50uF 100V
50uF 100V
400VDC
Aux input 2
1M
390
50uF 25V
Yellow
Red
Blue
Black
240VAC +
240VAC -
3A slow-blow
To regulator heaters V7-V8
4 off 0.01uF 2.5kV
100 2W
Humdinger control
To heaters V1-V6
V7
6L6GC
470K
V8
½ ECC83
56K 10W
V9
0A2
47K 10W
25K 2W
Regulated HT adjust
27K 10W
Voltage regulator circuit,
chassis markings suggest
400VDC output
Note: 2 cap cans in series,
no bypass resistors
100uF 450V
100uF 450V