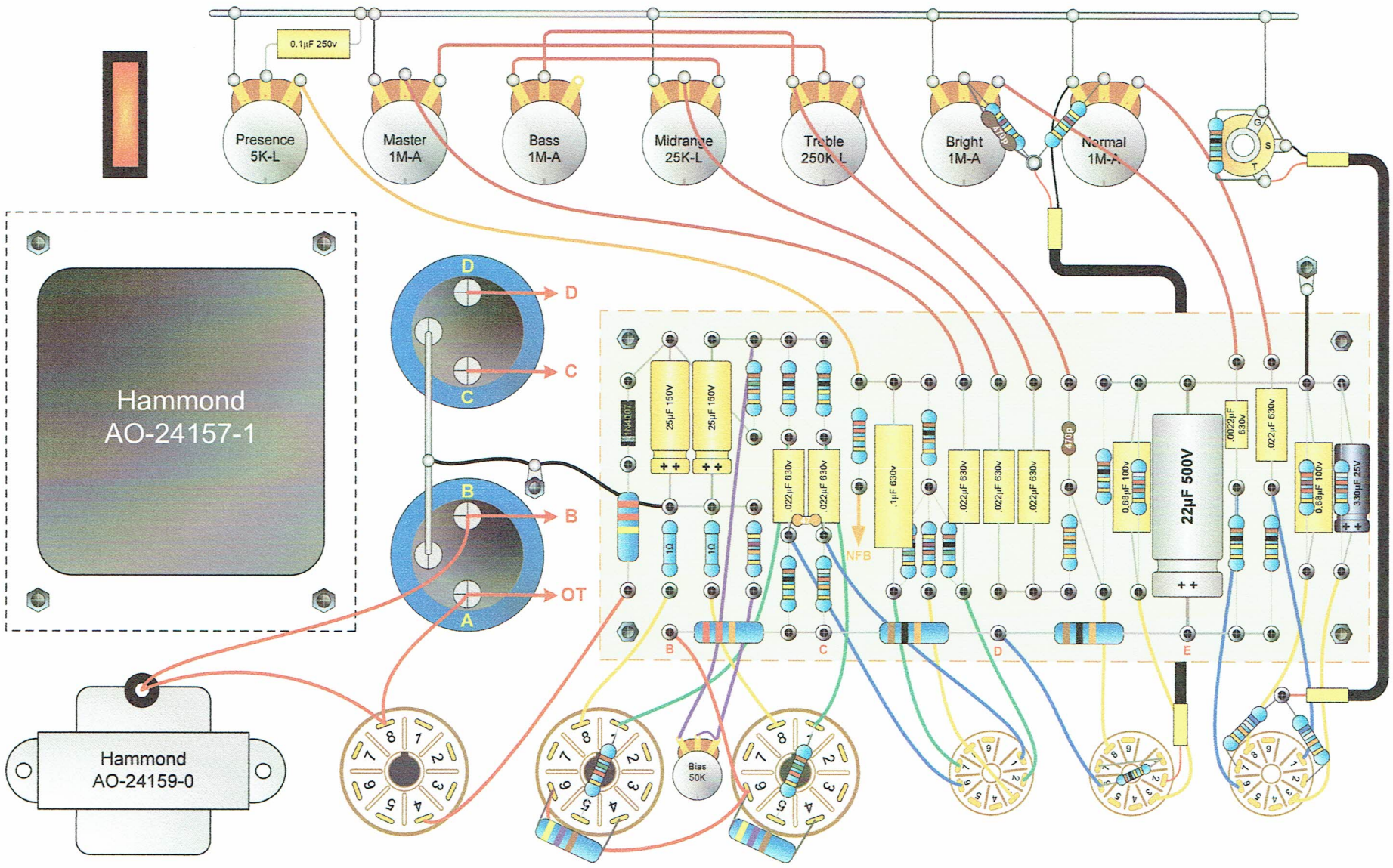
0.1µF 250v
Presence 5K-L
Master 1M-A
Bass 1M-A
Midrange 25K-L
Treble 250K-L
Bright 1M-A
Normal 1M-A
470p
G
S
T
Hammond AO-24157-1
D
C
B
A
OT
1N4007
25µF 150V
1Ω
.022µF 630v
.1µF 630v
NFB
470p
0.68µF 100v
22µF 500V
.0022µF 630v
330µF 25V
B
C
D
E
Hammond AO-24159-0
Bias 50K