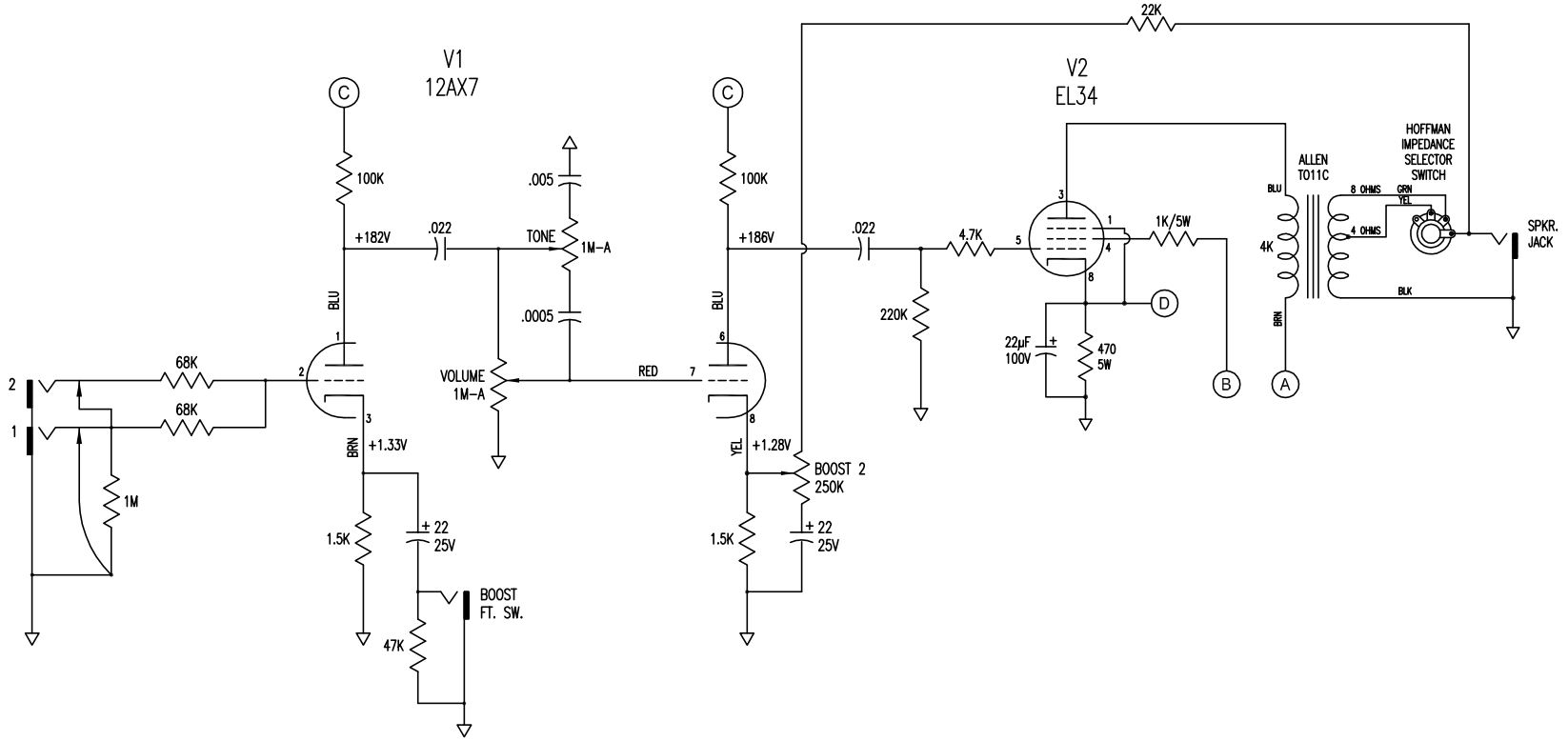
V1
12AX7
V2
EL34
22K
100K
+182V
.022
TONE
1M-A
.005
.0005
VOLUME
1M-A
RED
BLU
BRN
+1.33V
68K
68K
1M
1.5K
± 22
25V
47K
BOOST
FT. SW.
100K
+186V
.022
YEL
+1.28V
BOOST 2
250K
1.5K
± 22
25V
4.7K
220K
1K/5W
22µF
100V
470
5W
ALLEN
T011C
HOFFMAN
IMPEDANCE
SELECTOR
SWITCH
8 OHMS
4 OHMS
GRN
YEL
BLU
4K
BRN
BLK
SPKR.
JACK

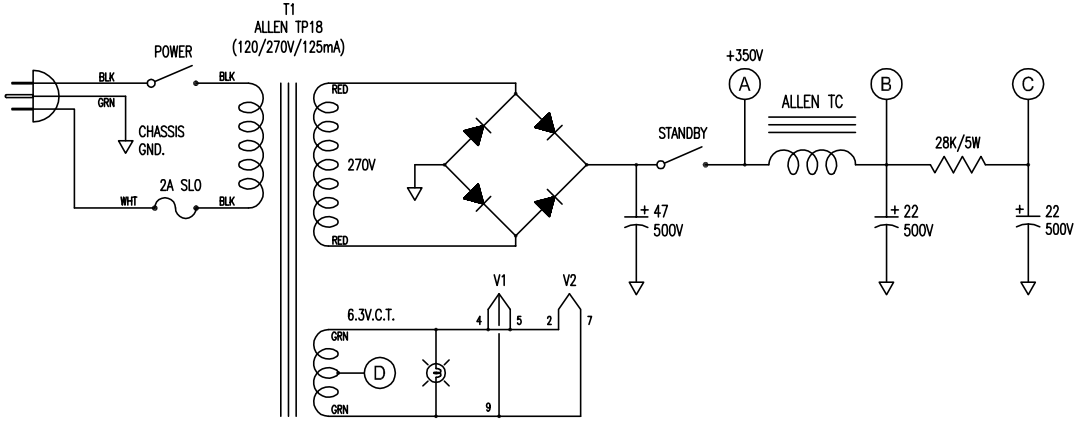
T1
ALLEN TP18
(120/270V/125mA)
POWER
BLK
GRN
CHASSIS
GND.
2A SLO
WHT
BLK
RED
270V
RED
± 47
500V
STANDBY
+350V
ALLEN TC
28K/5W
± 22
500V
± 22
500V
6.3V.C.T.
GRN
GRN
V1
V2

EL34 SE AMP