SilverFace
Tone
C23 = .022

Bord
c10 = .022
c16 = .022
R30 = 1M
R10 = 5,6k

BlackFace
Tone
C23 = .047

Bord
c10 = .1
c16 = .1
R30 = 470k
R10 = 2,7k

REVISIONS			
REV.	DESCRIPTION	DATE	APPROVED
A	PR770	10-OCT-07	H B K
B	EC3980	15-JAN-08	H B K
C	EC4002	10-MAR-08	H B K

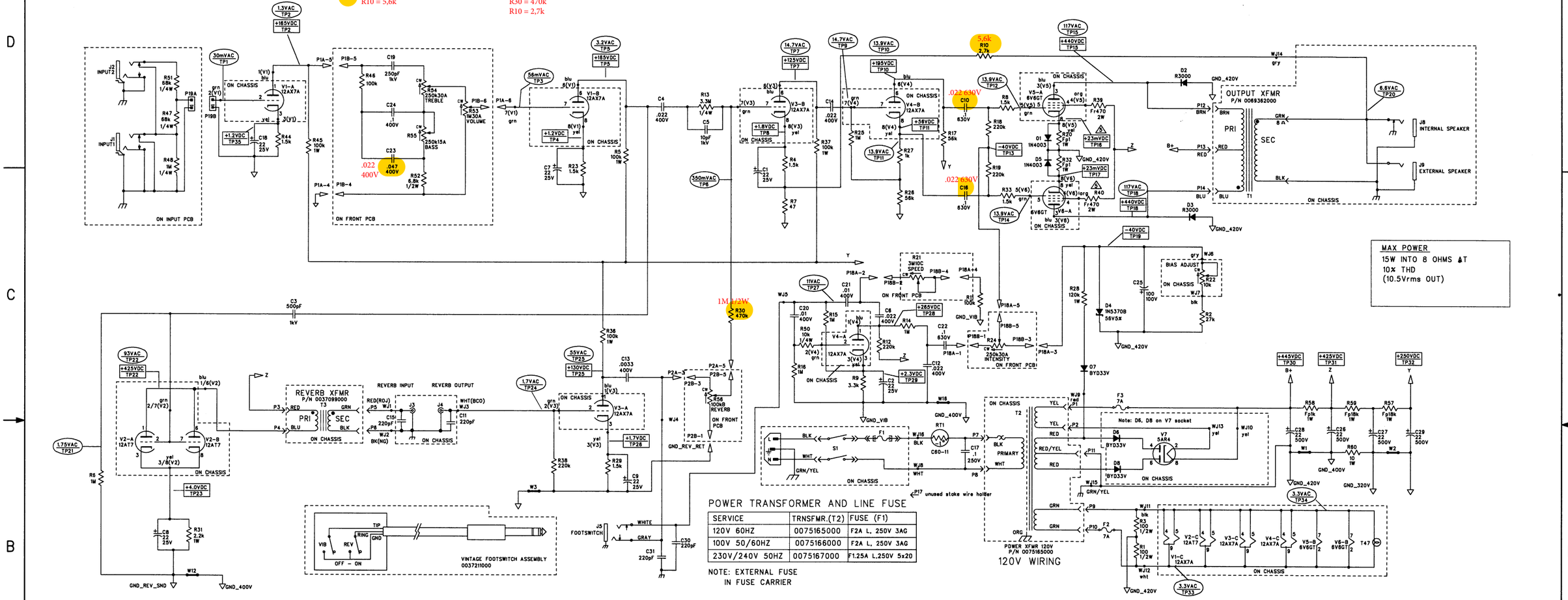

POWER TRANSFORMER AND LINE FUSE

SERVICE	TRNSFMR.(T2)	FUSE (F1)
120V 60HZ	0075165000	F2A L, 250V 3AG
100V 50/60HZ	0075166000	F2A L, 250V 3AG
230V/240V 50HZ	0075167000	F1.25A L,250V 5x20

NOTE: EXTERNAL FUSE
IN FUSE CARRIER

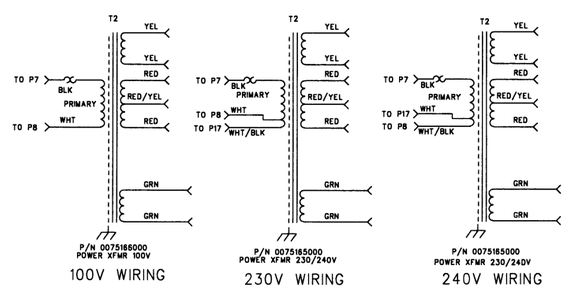

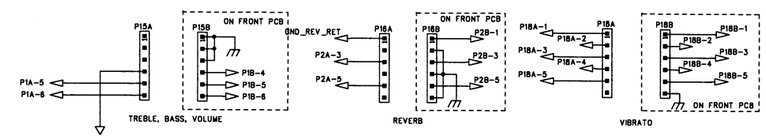

9. NOT USED REFERENCE DESIGNATORS: R34,R35,R41,R42,R43,R49,R52
8. LAST REFERENCE DESIGNATORS: R61, RT1, C31, D8, F3, J7
P19, TP43, V7, WJ15.
7. AC AND DC VOLTAGES READ TO GROUND WITH
A DVM UNDER THE FOLLOWING CONDITIONS:
UNIT AT RATED LINE VOLTAGE
8 OHM RESISTIVE LOAD CONNECTED AT SPEAKER JACK
NO FOOTSWITCH CONNECTED
NO INPUT SIGNAL ON DC TESTS (TP = SQUARE BOXES).
ADDITIONAL NOTES FOR AC TESTS (TP = OVAL):
INPUT TO J1 SET TO 30mV SINE WAVE AT 1 KHZ.
REVERB CONTROL AT "0"
REVERB P/N 0064063000 DISCONNECTED AND J3 AND J4 JUMPERED.
VOL, BASS, TREBLE AT 5.5.
SPEED/INTENSITY AT 0, EXCEPT FOR TP35 TEST; SET AT 5.5.

6. ALL TUBES IN CHASSIS MOUNTED SOCKETS.
5. BIAS IS SET BY MEASURING VOLTAGE AT TP16
(WITH NO SIGNAL APPLIED & TUBES WARMED UP).
SET VOLTMETER TO mV RANGE, SET 6V6 BIAS CURRENT
BY ADJUSTING BIAS CONTROL POT R22.
SPECIFIED VOLTAGE IS 23mV AT TP16.
VOLTAGE AT TP17 SHOULD BE WITHIN 20% OF TP16 VOLTAGE.
TYPICAL NEGATIVE BIAS VOLTAGE (WJ6 TO CHS) IS -40VDC.
4. THIS SCHEMATIC IS FOR PCB FABRICATION P/N 0075157000 AND
PCB ASSEMBLY P/N 0075158000.
3. ALL POLARIZED CAPACITORS IN uF, 20%; 50V MINIMUM.
2. ALL UNPOLARIZED CAPACITORS IN uF, 10% OR BETTER; 50V MINIMUM.
(POWER SUPPLY BYPASS CAPACITORS ARE 20%).
1. ALL RESISTORS IN OHMS, 5%; 1/2W, UNLESS NOTED.

NOTES: (UNLESS OTHERWISE NOTED)

THIS DOCUMENT CONTAINS INFORMATION OF A PROPRIETARY NATURE TO FENDER MUSICAL INSTRUMENTS AND IS SUBMITTED TO YOU IN CONFIDENCE AND SHALL NOT BE DISCLOSED OR TRANSMITTED TO OTHERS WITHOUT AUTHORIZATION FROM FENDER MUSICAL INSTRUMENTS.

CHECKED BY: M-Nelson
DATE: 3-10-2008
APPROVED BY: H. Kaplan
DATE: 3-10-2008
DRAWN: H KAPLAN | ENGR: H KAPLAN
DATABASE FILE: Z770S.SCH

Fender® MUSICAL INSTRUMENTS
Corona, CA U.S.A.

TITLE: SERVICE DIAGRAM, COMBINED (schematic)
PRINCETON '65 REVERB REISSUE

SIZE	DRAWING NUMBER	REV.
D	0075158000	C

RELEASE DATE: 30-NOV-07 | SHEET: 1 OF 2

REVISIONS			
REV.	DESCRIPTION	DATE	APPROVED
A	PR770	10-OCT-07	H B K
B	EC3980	15-JAN-08	H B K
C	EC4002	10-MAR-08	H B K

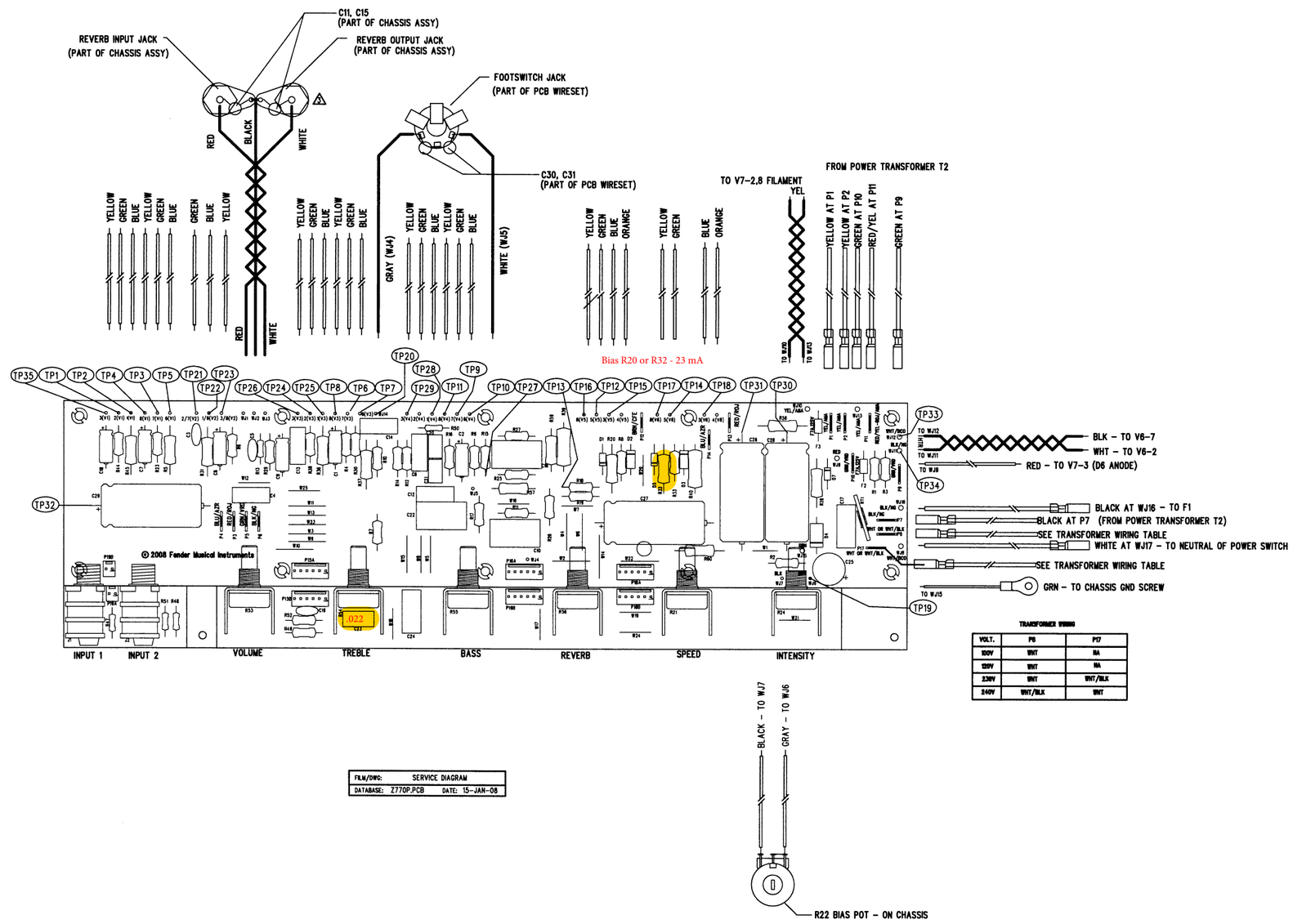

TRANSFORMER WIRING

VOLT.	P6	P17
100V	WHT	NA
120V	WHT	NA
230V	WHT	WHT/BLK
240V	WHT/BLK	WHT

FILM/DWG:	SERVICE DIAGRAM	
DATABASE:	Z770P.PCB	DATE: 15-JAN-08

NOTES: (UNLESS OTHERWISE NOTED)

1. SEE SHEET 1 FOR PRIMARY WIRING, TEST CONDITIONS AND TEST POINT VALUES.

THIS DOCUMENT CONTAINS INFORMATION OF A PROPRIETARY NATURE TO FENDER MUSICAL INSTRUMENTS AND IS SUBMITTED TO YOU IN CONFIDENCE AND SHALL NOT BE DISCLOSED OR TRANSMITTED TO OTHERS WITHOUT AUTHORIZATION FROM FENDER MUSICAL INSTRUMENTS.

CHECKED BY: M. Nilan
DATE: 3-10-2008
APPROVED BY: H. Kaplan
DATE: 3-10-2008
DRAWN: PK CORBIN | ENGR: H. KAPLAN
DATABASE FILE: Z770P.PCB

Fender MUSICAL INSTRUMENTS
Corona, CA U.S.A.

TITLE: SERVICE DIAGRAM, COMBINED (PCB assy)
PRINCETON '65 REVERB AMPLIFIER

SIZE D | DRAWING NUMBER 0075158000 | REV. C
RELEASE DATE: 10-OCT-07 | SHEET 2 OF 2