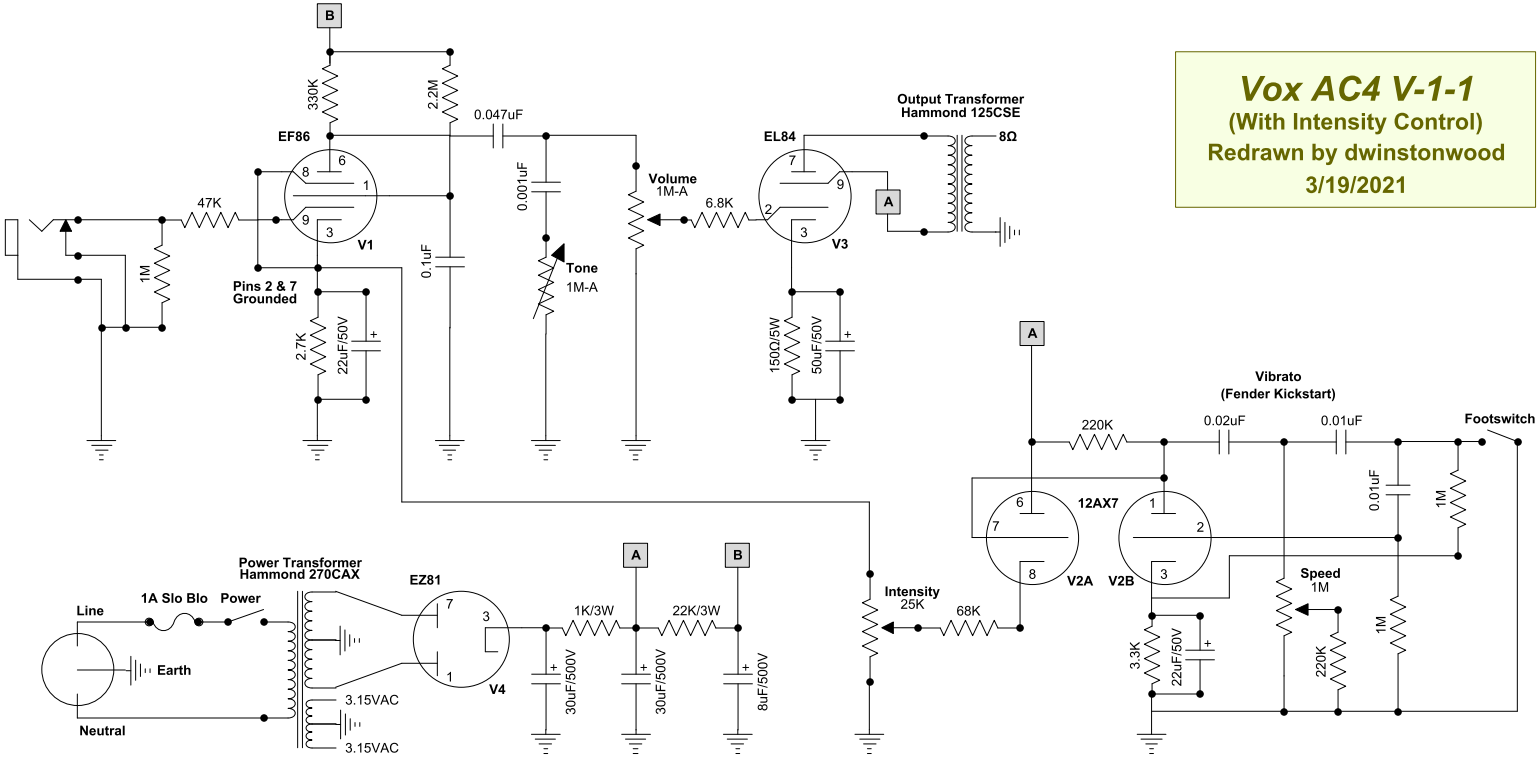
Vox AC4 V-1-1
(With Intensity Control)
Redrawn by dwinstonwood
3/19/2021
B
330K
2.2M
0.047uF
EF86
8
6
1
9
3
V1
47K
1M
Pins 2 & 7
Grounded
2.7K
22uF/50V
0.1uF
0.001uF
Tone
1M-A
Volume
1M-A
6.8K
EL84
7
9
2
3
V3
A
Output Transformer
Hammond 125CSE
8Ω
150Ω/5W
50uF/50V
A
Vibrato
(Fender Kickstart)
220K
0.02uF
0.01uF
Footswitch
0.01uF
1M
12AX7
6
7
8
V2A
1
2
3
V2B
Speed
1M
3.3K
22uF/50V
220K
1M
Intensity
25K
68K
Power Transformer
Hammond 270CAX
1A Slo Blo
Power
Line
Earth
Neutral
EZ81
7
3
1
V4
3.15VAC
3.15VAC
A
B
1K/3W
22K/3W
30uF/500V
30uF/500V
8uF/500V