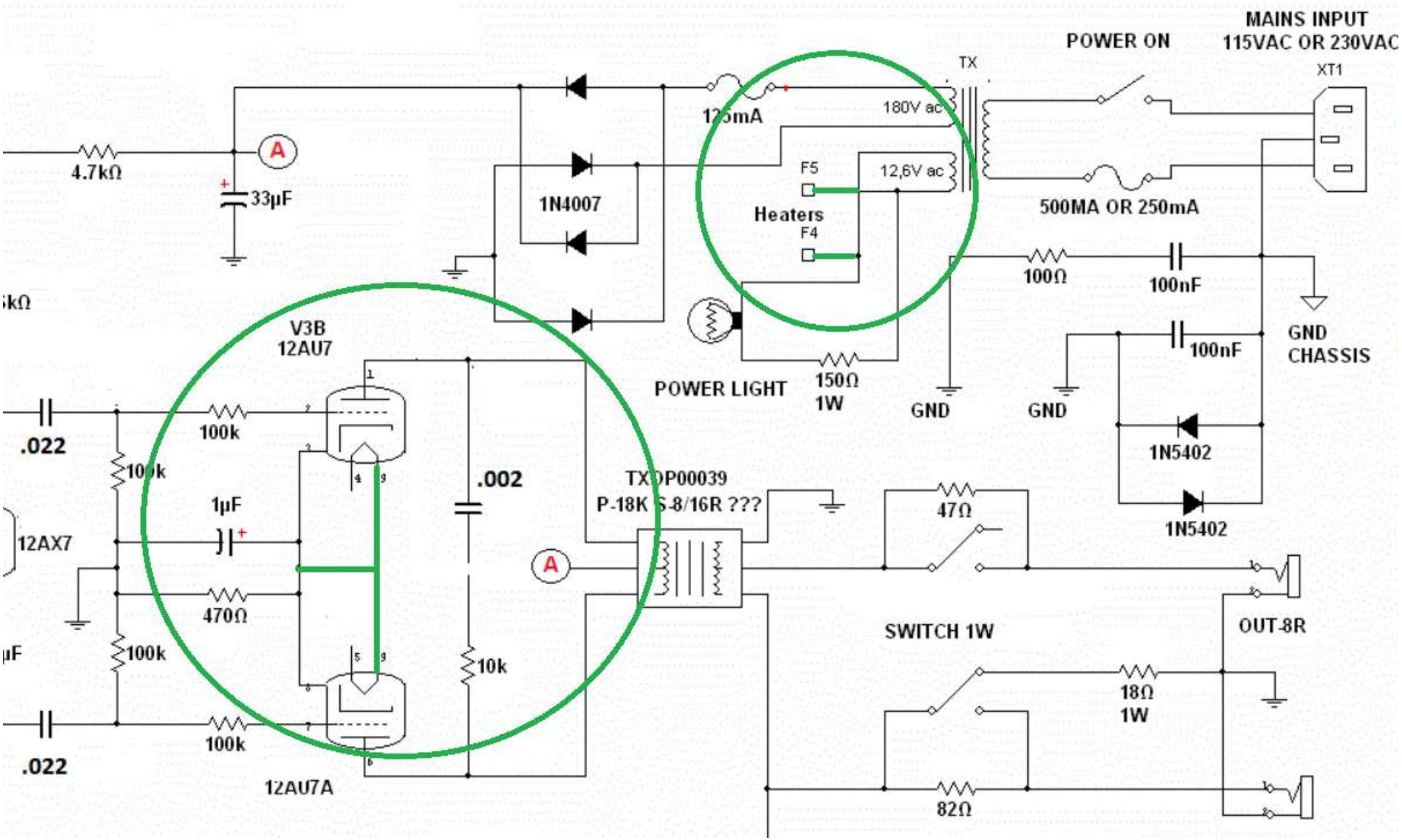
MAINS INPUT
115VAC OR 230VAC
POWER ON
XT1
TX
180V ac
12,6V ac
F5
F4
Heaters
500MA OR 250mA
125mA
4.7kΩ
33µF
A
1N4007
100Ω
100nF
GND
CHASSIS
V3B
12AU7
POWER LIGHT
150Ω
1W
GND
GND
.022
100k
1µF
.002
TX0P00039
P-18K S-8/16R ???
47Ω
1N5402
1N5402
12AX7
470Ω
SWITCH 1W
OUT-8R
10k
18Ω
1W
.022
12AU7A
82Ω